Classification of Projections*

(Com S 477/577 Notes)

Yan-Bin Jia

Sep 6, 2022

1 Foreshortening Ratio

Two types of projection, parallel and perspective, have been introduced. In this lecture, further distinctions of these types are made according to how the viewpoint and viewplane are located with respect to the world coordinate frame. The directions of the world coordinate axes are referred to as the *principal directions*.

The projection of a line segment onto a viewplane is still a line segment, since the projection is a linear transformation. Just the image line segment may have a different length. The *foreshortening ratio* of the original line segment is

$$\frac{\text{length of projected segment}}{\text{length of original segment}}.$$

Consider a projection decribed by the matrix M. Let $\boldsymbol{p}$ and $\boldsymbol{q}$ be two distinct points on a line ℓ whose direction is given by the unit vector $\hat{\boldsymbol{l}}$. We have $\boldsymbol{p} - \boldsymbol{q} = \lambda\hat{\boldsymbol{l}}$ for some $\lambda \neq 0$. The foreshortening ratio of the line segment $\overline{\boldsymbol{pq}}$ is then

$$\begin{aligned}
\frac{\|M\boldsymbol{p} - M\boldsymbol{q}\|}{\|\boldsymbol{p} - \boldsymbol{q}\|} &= \frac{\|M(\boldsymbol{p} - \boldsymbol{q})\|}{\|\boldsymbol{p} - \boldsymbol{q}\|} \\
&= \frac{\|M(\lambda\hat{\boldsymbol{l}})\|}{\|\lambda\hat{\boldsymbol{l}}\|} \\
&= \frac{\lambda\|M\hat{\boldsymbol{l}}\|}{\lambda\|\hat{\boldsymbol{l}}\|} \\
&= \|M\hat{\boldsymbol{l}}\|,
\end{aligned}$$

since $\|\hat{\boldsymbol{l}}\| = 1$. From the above, we see that the ratio depends on the direction of the line only.

Example 1. Consider the line segment $\overline{\boldsymbol{pq}}$ with endpoints $\boldsymbol{p} = (0, 1, 1)^T$ and $\boldsymbol{q} = (2, 1, 3)^T$. The segment is under a parallel projection onto the plane $z = 0$ in the direction of the z-axis. So we have the viewpoint $\boldsymbol{v} = (0, 0, -1, 0)^T$ and the normal vector $\boldsymbol{n} = (0, 0, 1, 0)^T$. And the projection matrix is

$$M = \boldsymbol{v}\boldsymbol{n}^T - (\boldsymbol{v} \cdot \boldsymbol{n})I_4$$

*All figures are from [1].

$$
\begin{aligned}
&= \begin{pmatrix} 0 \\ 0 \\ -1 \\ 0 \end{pmatrix} (0 \;\; 0 \;\; 1 \;\; 0) + \begin{pmatrix} 1 & 0 & 0 & 0 \\ 0 & 1 & 0 & 0 \\ 0 & 0 & 1 & 0 \\ 0 & 0 & 0 & 1 \end{pmatrix} \\
&= \begin{pmatrix} 1 & 0 & 0 & 0 \\ 0 & 1 & 0 & 0 \\ 0 & 0 & 0 & 0 \\ 0 & 0 & 0 & 1 \end{pmatrix}.
\end{aligned}
$$

So the images of the two endpoints are computed to be

$$
(\boldsymbol{p}' \;\; \boldsymbol{q}') = M(\boldsymbol{p} \;\; \boldsymbol{q}) = \begin{pmatrix} 1 & 0 & 0 & 0 \\ 0 & 1 & 0 & 0 \\ 0 & 0 & 0 & 0 \\ 0 & 0 & 0 & 1 \end{pmatrix} \begin{pmatrix} 0 & 2 \\ 1 & 1 \\ 1 & 3 \\ 1 & 1 \end{pmatrix} = \begin{pmatrix} 0 & 2 \\ 1 & 1 \\ 0 & 0 \\ 1 & 1 \end{pmatrix}
$$

In Cartesian coordinates, the images are $(0,1,0)^T$ and $(2,1,0)^T$. The original line segment has length $2\sqrt{2}$ and the image segment has length 2. Thus the foreshortening ratio is $\frac{2}{2\sqrt{2}} = \frac{\sqrt{2}}{2}$.

2 Classification of Parallel Projections

There are three types of parallel projection, namely, orthographic, axonometric, and oblique.

2.1 Orthographic Projection

A parallel projection is called an *orthographic projection* if the direction of projection is perpendicular to the viewplane. Let $\boldsymbol{n} = (n_1, n_2, n_3, n_4)^T$ be the viewplane vector. Then the center of projection (i.e., the viewing point) is $\boldsymbol{v} = (-n_1, -n_2, -n_3, 0)^T$. We calculate the projection matrix

$$
\begin{aligned}
M &= \begin{pmatrix} -n_1 \\ -n_2 \\ -n_3 \\ 0 \end{pmatrix} (n_1 \;\; n_2 \;\; n_3 \;\; n_4) + (n_1^2 + n_2^2 + n_3^2) \begin{pmatrix} 1 & 0 & 0 & 0 \\ 0 & 1 & 0 & 0 \\ 0 & 0 & 1 & 0 \\ 0 & 0 & 0 & 1 \end{pmatrix} \\
&= \begin{pmatrix} n_2^2 + n_3^2 & -n_1 n_2 & -n_1 n_3 & -n_1 n_4 \\ -n_1 n_2 & n_1^2 + n_3^2 & -n_2 n_3 & -n_2 n_4 \\ -n_1 n_3 & -n_2 n_3 & n_1^2 + n_2^2 & -n_3 n_4 \\ 0 & 0 & 0 & n_1^2 + n_2^2 + n_3^2 \end{pmatrix}. \qquad (1)
\end{aligned}
$$

Example 2. The projection matrix for an orthographic projection onto the xy-plane (for which $\boldsymbol{n} = (0,0,1,0)^T$ and $\boldsymbol{v} = (0,0,-1,0)^T$ is

$$
M = \begin{pmatrix} 1 & 0 & 0 & 0 \\ 0 & 1 & 0 & 0 \\ 0 & 0 & 0 & 0 \\ 0 & 0 & 0 & 1 \end{pmatrix}.
$$

Theorem 1 *Suppose the view plane vector $\boldsymbol{n}$ is chosen such that $n_1^2 + n_2^2 + n_3^2 = 1$ (thus the direction cosines of the plane normal in the world coordinate system are n_1, n_2, and n_3, respectively). The corresponding orthographic projection yields foreshortening ratios $(n_2^2 + n_3^2)^{1/2}$, $(n_1^2 + n_3^2)^{1/2}$, and $(n_1^2 + n_2^2)^{1/2}$ in the x-, y-, and z-directions, respectively.*

Proof Left as an exercise. □

An orthographic projection can show the true dimensions and shape of a single planar face of an object. They are commonly used in engineering and architectural drawings and occur as 'front, side, and planar elevations'.

Axonometric projections are orthographic projections that attempt to portray the general three-dimensional shape of an object. There are three types of axonometric projection distinguished by whether none, two, or all three of the foreshortening ratios in the principal directions are equal. It follows from Theorem 1 that the distinction is equivalent to none, two, or all three of the direction cosines of the projection direction vector being equal.

- A *trimetric projection* happens when $|n_1|$, $|n_2|$, and $|n_3|$ are all different. As a result, all foreshortening ratios in the principal directions are different from each other.
- A *dimetric projection* occurs when exactly one of $|n_1| = |n_2|$, $|n_2 = n_3|$, and $|n_1| = |n_3|$ is true.
- An *isometric projection* is obtained when $|n_1| = |n_2| = |n_3|$. Since all the foreshortening factors are equal, the object is scaled equally in all three directions.

The foreshortening factors in the x, y, and z directions are denoted f_1, f_2, and f_3, respectively.

EXAMPLE 3. The effect of the various parallel projections on the unit cube with vertices $(0,0,0)^T$, $(1,0,0)^T$, $(1,1,0)^T$, $(0,1,0)^T$, $(0,0,1)^T$, $(1,0,1)^T$, $(1,1,1)^T$, $(0,1,1)^T$ are shown in Figure 1.

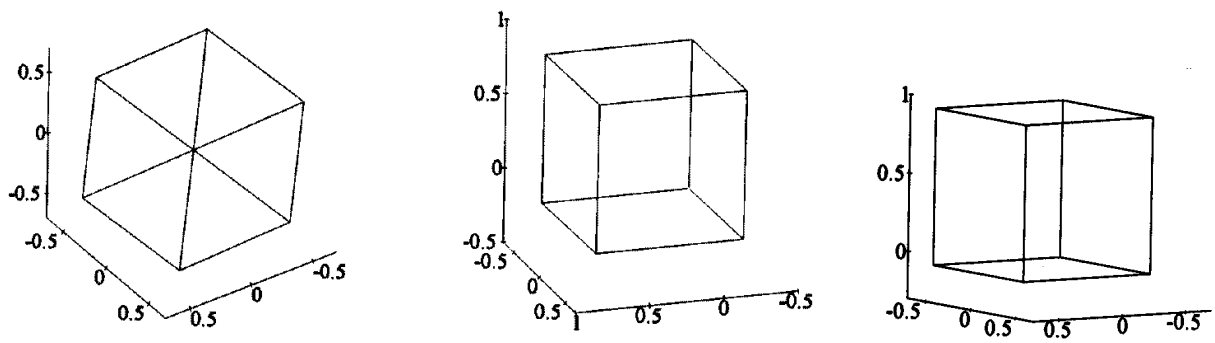

(a) (b) (c)

Figure 1: (a) Isometric projection with $\boldsymbol{n} = (1/\sqrt{3}, 1/\sqrt{3}, 1/\sqrt{3}, 0)^T$, the foreshortening factors $f_1 = f_2 = f_3 = \sqrt{6}/3$ in the x-, y-, and z-axes, respectively; (b) dimetric projection with $\boldsymbol{n} = (1/3, \sqrt{7}/3, 1/3, 0)^T$, $f_1 = f_3 = \frac{2}{3}\sqrt{2}$, $f_2 = \sqrt{2}/3$; and trimetric projection with $\boldsymbol{n} = (\frac{1}{3}\sqrt{3}, \frac{7}{15}\sqrt{3}, \frac{1}{15}\sqrt{3}, 0)^T$, $f_1 = \sqrt{2/3}$, $f_2 = \sqrt{26/75}$, $f_3 = \sqrt{74/75}$.

2.2 Oblique Projection

When the direction of a parallel projection is not perpendicular to the viewing plane, it is called an *oblique projection*. In general, oblique projections give an impression of the depth of an object. The foreshortening ratio of line segments parallel to the viewplane is 1.

When the view direction $(v_1, v_2, v_3)^T$ makes an angle of $\frac{\pi}{4}$ with the viewplane, a *cavalier projection* is obtained. Under the projection, line segments perpendicular to the viewplane have

foreshortening ratio 1. The result is that an object with planar faces perpendicular to, or parallel to, the viewplane appears thicker than in reality. Let $(n_1, n_2, n_3)^T$ be the viewplane normal, a cavalier projection satisfies the identity

$$\begin{pmatrix} v_1 \\ v_2 \\ v_3 \end{pmatrix} \cdot \begin{pmatrix} n_1 \\ n_2 \\ n_3 \end{pmatrix} = \pm \cos \frac{\pi}{4} \sqrt{v_1^2 + v_2^2 + v_3^2} \sqrt{n_1^2 + n_2^2 + n_3^2}. \tag{2}$$

Example 4. Consider the cavalier projection onto the $z = 0$ plane. Then $\boldsymbol{n} = (0, 0, 1, 0)^T$ and identity (2) simplifies to $v_3^2 = v_1^2 + v_2^2$. So we choose a suitable view direction $(3, 4, 5)^T$, which results in the projection matrix

$$\begin{aligned} M &= \begin{pmatrix} 3 \\ 4 \\ 5 \\ 0 \end{pmatrix} (0 \;\; 0 \;\; 1 \;\; 0) - 5 \begin{pmatrix} 1 & 0 & 0 & 0 \\ 0 & 1 & 0 & 0 \\ 0 & 0 & 1 & 0 \\ 0 & 0 & 0 & 1 \end{pmatrix} \\ &= \begin{pmatrix} -5 & 0 & 3 & 0 \\ 0 & -5 & 4 & 0 \\ 0 & 0 & 0 & 0 \\ 0 & 0 & 0 & -5 \end{pmatrix}. \end{aligned}$$

Applying M to the line segment joining the origin to the point $(0, 0, 10)^T$, which is perpendicular to the viewplane, gives the segment joining the origin to the point $(-6, -8, 0)^T$. The projection line segment has length 10. Thus the foreshortening ratio is 1 as expected. The projection of the unit cube is illustrated in Figure 2(a).

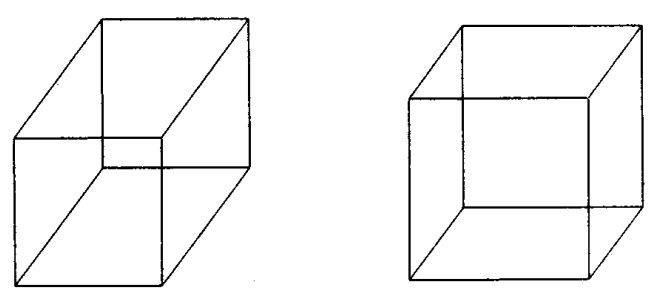

(a) (b)

Figure 2: (a) Cavalier projection and (b) cabinet projection.

A *cabinet projection* overcomes the 'thickness' problem of a cavalier projection in that the foreshortening factor for faces perpendicular to the viewing plane is chosen to be $\frac{1}{2}$. This is achieved when the projection direction makes an angle of $\phi = \operatorname{arccot}(1/2)^T$ with the viewplane. Here $\sin \phi = 2/\sqrt{5}$ and $\cos \phi = 1/\sqrt{5}$. The angle between the viewplane normal and the projection direction is $\theta = \frac{\pi}{2} \mp \phi$. Thus $\cos \theta = \cos(\frac{\pi}{2} \mp \phi) = \pm \sin \phi = \pm 2/\sqrt{5}$. Therefore, the cabinet projection satisfies the identity

$$\begin{pmatrix} v_1 \\ v_2 \\ v_3 \end{pmatrix} \cdot \begin{pmatrix} n_1 \\ n_2 \\ n_3 \end{pmatrix} = \pm \frac{2}{\sqrt{5}} \sqrt{v_1^2 + v_2^2 + v_3^2} \sqrt{n_1^2 + n_2^2 + n_3^2}. \tag{3}$$

Example 5. Consider the cabinet projection onto the $z = 0$ plane. Then the plane vector $\boldsymbol{n} = (0, 0, 1, 0)^T$. Condition (3) simplifies to $v_3^2 = 4(v_1^2 + v_2^2)^T$. A suitable view direction would be $(3, 4, 10)^T$. The projection matrix is accordingly

$$\begin{aligned} M &= \begin{pmatrix} 3 \\ 4 \\ 10 \\ 0 \end{pmatrix} (0 \;\; 0 \;\; 1 \;\; 0) - 10 \begin{pmatrix} 1 & 0 & 0 & 0 \\ 0 & 1 & 0 & 0 \\ 0 & 0 & 1 & 0 \\ 0 & 0 & 0 & 1 \end{pmatrix} \\ &= \begin{pmatrix} -10 & 0 & 3 & 0 \\ 0 & -10 & 4 & 0 \\ 0 & 0 & 0 & 0 \\ 0 & 0 & 0 & -10 \end{pmatrix}. \end{aligned}$$

Applying M to the line segment joining the origin to the point $(0, 0, 10)^T$, which is perpendicular to the viewplane, yields the segment joining the origin to the point $(-3, -4, 0)^T$. The image segment has length 5, and the foreshortening ration is $1/2$ as expected. The projection of the unit cube is illustrated in Figure 2(b).

3 Classification of Perspective Projections

Under a perspective projection, the images of parallel lines in the space may be intersecting lines in the viewplane.

Theorem 2 *A parallel projection always maps parallel lines in the space to parallel lines in the viewplane. A perspective projection maps parallel lines in the space to parallel lines in the viewplane if and only if the lines are parallel to the viewplane. A projection which maps points at infinity in three linearly independent directions to points at infinity is a parallel projection.*

Proof A point at infinity $(x, y, z, 0)^T$ "lies" on all parallel lines in the direction $(x, y, z)^T$. Its image point in the viewplane is where the images of these parallel lines "intesect" in the plane. Thus, parallel lines in the direction $(x, y, z)^T$ project to parallel lines in the viewplane if and only if the point at infinity $(x, y, z, 0)^T$ projects to a point at infinity in the viewplane.

Let $\boldsymbol{v} = (v_1, v_2, v_3, v_4)^T$ be the viewpoint and $\boldsymbol{n} = (n_1, n_2, n_3, n_4)^T$ the plane vector of the viewplane, all in homogeneous coordinates. The projection matrix is $M = (m_{ij}) = \boldsymbol{v}\boldsymbol{n}^T - (\boldsymbol{v} \cdot \boldsymbol{n})I_4$. The image point is

$$\boldsymbol{p}' = M\boldsymbol{p} = \begin{pmatrix} m_{11}x + m_{12}y + m_{13}z \\ m_{21}x + m_{22}y + m_{23}z \\ m_{31}x + m_{32}y + m_{33}z \\ m_{41}x + m_{42}y + m_{43}z \end{pmatrix}.$$

Since $m_{4j} = v_4 n_j$, $j = 1, 2, 3$, $\boldsymbol{p}'$ is an infinity point if any only if

$$v_4(n_1x + n_2y + n_3z) = 0. \tag{4}$$

If the projection is parallel, then $v_4 = 0$ and $\boldsymbol{p}'$ is at infinity as (4) holds. Thus parallel lines in the space are mapped to parallel lines in the viewplane.

If the projection is perspective, then $v_4 \neq 0$. Hence $\boldsymbol{p}'$ is an infinity point if and only if $(n_1, n_2, n_3) \cdot (x, y, z) = 0$, or equivalently, if and only if the lines in direction $(x, y, z)^T$ are perpendicular to the viewplane vector, that is, parallel to the viewplane.

Take three linearly independent directions $(x_i, y_i, z_i)^T$, $i = 1, 2, 3$. Suppose the points at infinity in these directions map to points at infinity of the viewplane. Then $v_4(n_1x_i + n_2y_i + n_3z_i) = 0$ for $i = 1, 2, 3$. Assuming $v_4 \neq 0$, we would have

$$\begin{pmatrix} x_1 & y_1 & z_1 \\ x_2 & y_2 & z_2 \\ x_3 & y_3 & z_3 \end{pmatrix} \begin{pmatrix} n_1 \\ n_2 \\ n_3 \end{pmatrix} = 0.$$

Because the 3×3 matrix in the product on the left is non-singular, the above implies $(n_1, n_2, n_3) = (0, 0, 0)^T$. A contradiction. So $v_4 = 0$ and the projection is parallel. $\square$

Suppose $(x_i, y_i, z_i)^T$, $i = 1, 2, 3$, are a set of mutually perpendicular vectors. Then the viewplane vector $(n_1, n_2, n_3)^T$ of a perspective projection can be perpendicular to (a) none of the vectors; (b) one of the vectors; or (c) two of the vectors. Applying Theorem 2, we can further characterize these three cases below.

(a) (**three-point perspective**) The family of parallel lines in each of the three directions maps to a family of non-parallel lines.

(b) (**two-point perspective**) Without loss of generality, suppose $(x_1, y_1, z_1)^T$ is the only vector perpendicular to $(n_1, n_2, n_3)^T$. Then all lines in the direction of $(x_1, y_1, z_1)^T$ map to parallel lines. But the lines in the direction of $(x_2, y_2, z_2)^T$ map to non-parallel lines. The same holds for the lines in the direction of $(x_3, y_3, z_3)^T$.

(c) (**one-point perspective**) Suppose $(x_1, y_1, z_1)^T$ and $(x_2, y_2, z_2)^T$ are perpendicular to $(n_1, n_2, n_3)^T$ but $(x_3, y_3, z_3)^T$ is not. Then the families of lines with directions $(x_1, y_1, z_1)^T$ and $(x_2, y_2, z_2)^T$ map to families of parallel lines. But the family parallel to $(x_3, y_3, z_3)^T$ maps to a family of non-parallel lines.

If a perspective projection maps an infinite point $(x, y, z, 0)^T$ to a finite point $(x', y', z', 1)^T$ in the viewplane, then lines in the direction $(x, y, z)^T$ (which contain the infinite point $(x, y, z, 0)^T$) appear as lines converging to the point $(x', y', z')^T$ in the (Cartesian) viewplane. The point $(x', y', z')^T$ is called the *vanishing point* for the direction $(x, y, z)^T$.

A *one-point* perspective projection happens when only one principal direction has a vanishing point. Similarly, a *two-point* (respectively, *three-point*) perspective projection happens when exactly two (respectively, three) principal directions have vanishing points.

Example 6. The perspective projection onto the $z = 0$ from the viewpoint $(-1, 0, 2)^T$ is a one-point projection. To verify, note that the viewplane vector $\boldsymbol{n}_1 = (0, 0, 1, 0)^T$ and the viewpoint $\boldsymbol{v} = (-1, 0, 2, 1)^T$. The projection matrix is

$$M_1 = \begin{pmatrix} -1 \\ 0 \\ 2 \\ 1 \end{pmatrix} (0 \;\; 0 \;\; 1 \;\; 0) - 2 \begin{pmatrix} 1 & 0 & 0 & 0 \\ 0 & 1 & 0 & 0 \\ 0 & 0 & 1 & 0 \\ 0 & 0 & 0 & 1 \end{pmatrix} = \begin{pmatrix} -2 & 0 & -1 & 0 \\ 0 & -2 & 0 & 0 \\ 0 & 0 & 0 & 0 \\ 0 & 0 & 1 & -2 \end{pmatrix}$$

Next, we determine the images of the infinity points on the three principal axes:

$$M_1 \begin{pmatrix} 1 \\ 0 \\ 0 \\ 0 \end{pmatrix} = \begin{pmatrix} -2 \\ 0 \\ 0 \\ 0 \end{pmatrix}, \qquad M_1 \begin{pmatrix} 0 \\ 1 \\ 0 \\ 0 \end{pmatrix} = \begin{pmatrix} 0 \\ -2 \\ 0 \\ 0 \end{pmatrix}, \qquad M_1 \begin{pmatrix} 0 \\ 0 \\ 1 \\ 0 \end{pmatrix} = \begin{pmatrix} -1 \\ 0 \\ 0 \\ 1 \end{pmatrix}.$$

Thus the vanishing point is unique and given by $(-1, 0, 0)^T$ in Cartesian coordinates. The effect of projection on the unit cube is shown in Figure 3.

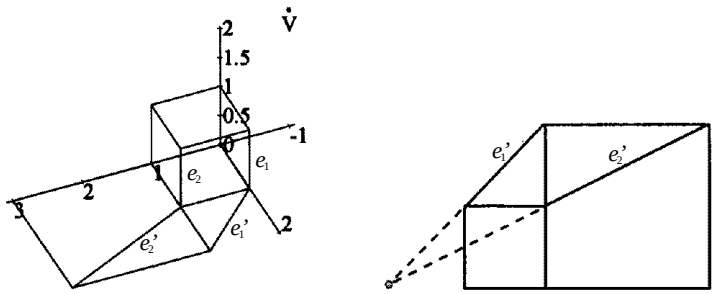

(a) (b)

Figure 3: (a) One-point perspective projection and (b) vanishing point. This and the next two figures are taken from [1] with edge labels added.

The perspective projection onto the plane $x - 3z = 0$ from the same viewpoint $(-1, 0, 2)^T$ is a two-point projection. The projection matrix is computed to be

$$M_2 = \begin{pmatrix} 6 & 0 & 3 & 0 \\ 0 & 7 & 0 & 0 \\ 2 & 0 & 1 & 0 \\ 1 & 0 & -3 & 7 \end{pmatrix}.$$

There are two vanishing points $(6, 0, 2)^T$ and $(-1, 0, -\frac{1}{3})^T$ as shown in Figure 4.

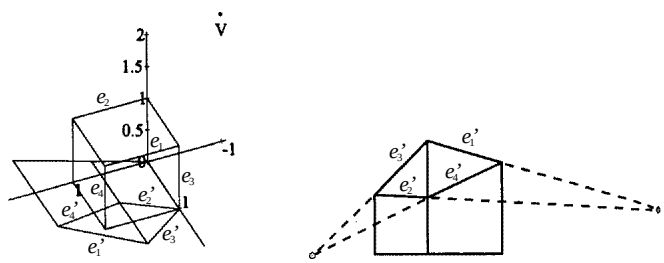

(a) (b)

Figure 4: (a) Two-point perspective projection and (b) vanishing points.

The perspective projection onto the plane $x + 2y - z - 3 = 0$ from the same viewpoint $(-1, 0, 2)^T$ is a three-point projection. Here the plane vector $n = (1, 2, -1, -3)^T$ and the projection matrix is

$$M_3 = \begin{pmatrix} 5 & -2 & 1 & 3 \\ 0 & 6 & 0 & 0 \\ 2 & 4 & 4 & -6 \\ 1 & 2 & -1 & 3 \end{pmatrix}.$$

The projection has three vanishing points $(5, 0, 2)^T$, $(-1, 3, 2)^T$, and $(-1, 0, -4)^T$, as shown in Figure 5.

References

[1] D. Marsh. *Applied Geometry for Computer Graphics and CAD.* Springer-Verlag, 1999.

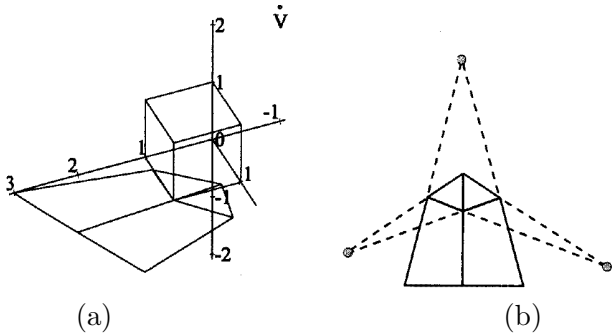

Figure 5: (a) Three-point perspective projection and (b) vanishing points.