AC Calorimetry
Principle, Schematic, Examples

Chaochao Pan

PHYS 590B 18F

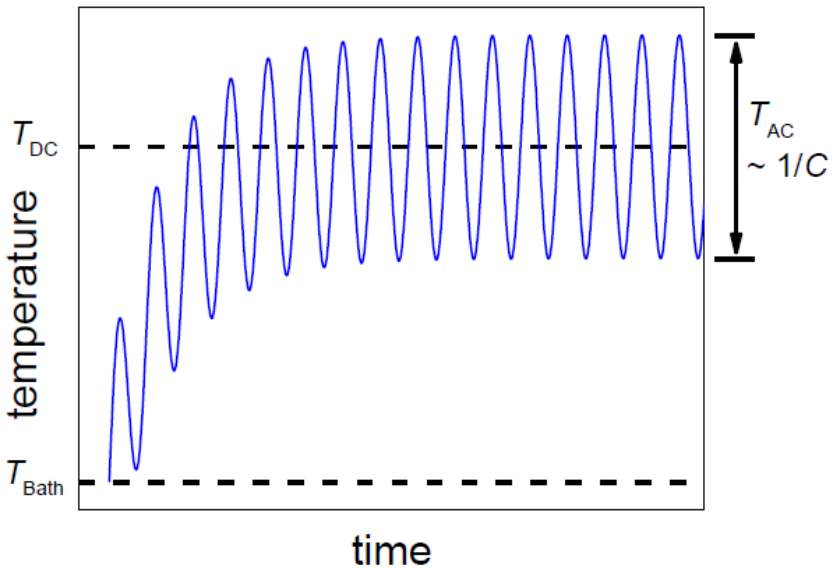

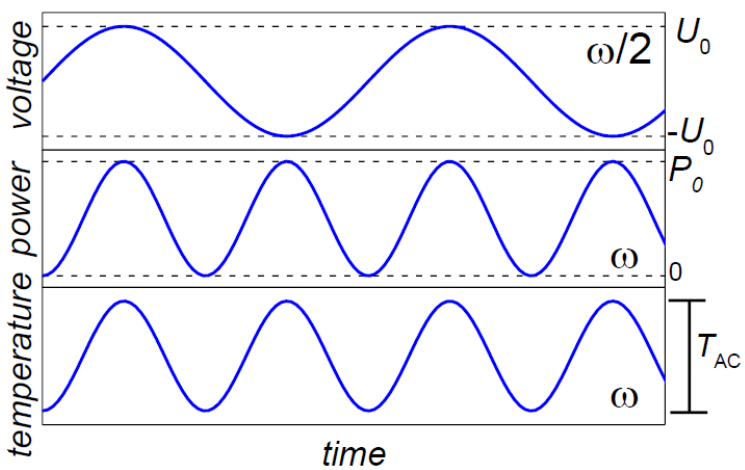

$$T_{AC} \sim 1/C_S$$

$$\cos^2(x) = \tfrac{1}{2}\left[1 + \cos(2x)\right]$$

$$I = I_0 \cos\left(\frac{1}{2}\omega t\right)$$

$$P = I_0^2 R \cos^2\left(\frac{1}{2}\omega t\right)$$

$$T = T_{dc} + T_{ac}\cos(\omega t + \varphi)$$

Simplified model

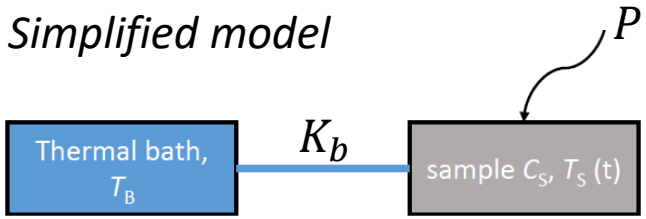

$$C_s \dot{T}_s = \dot{Q}_s = P - K_b(T_s - T_b)$$

$$T_{ac} = \frac{P_0}{2K_b}(1 + \omega^2\tau^2)^{-1/2}$$

$$\tau = \frac{C_s}{K_b}$$

Simple but requires knowledge of R(P, T)!

$K_s = \infty$

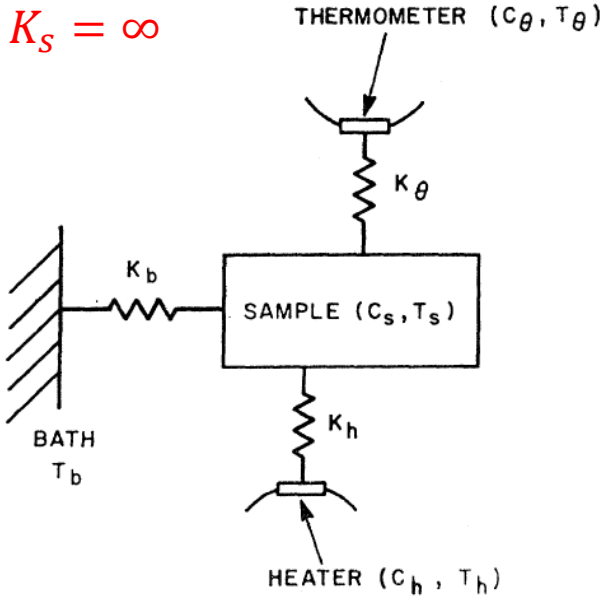

$$\dot{Q} = \dot{Q}_0 (\cos\tfrac{1}{2}\omega t)^2,$$

$$C_h \dot{T}_h = \dot{Q}_h = \dot{Q}_0 (\cos\tfrac{1}{2}\omega t)^2 - K_h (T_h - T_s),$$
$$C_s \dot{T}_s = \dot{Q}_s = K_h (T_h - T_s) - K_b (T_s - T_b) - K_\theta (T_s - T_\theta),$$
$$C_\theta \dot{T}_\theta = \dot{Q}_\theta = K_\theta (T_s - T_\theta).$$

$$T_\theta = T_{dc} + T_{ac} \cos(\omega t + \varphi)$$

If $\omega^2 (\tau_\theta^2 + \tau_h^2) \ll 1$

and $\omega \tau_s \gg 1$

$$T_{ac} = \frac{P_0}{2\omega C} \left[1 + \frac{1}{\omega^2 \tau_s^2} + \omega^2 (\tau_\theta^2 + \tau_h^2) \right]^{-1/2}$$

$K_s \neq \infty$

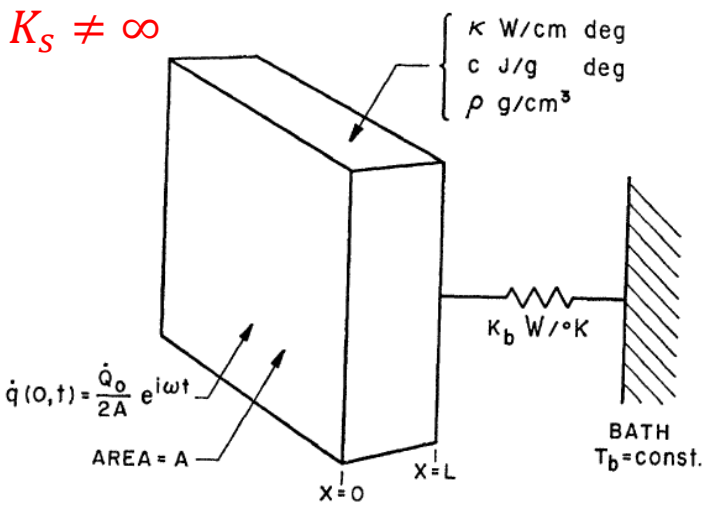

$$T_{ac} = \frac{\dot{Q}_0}{2\omega C} \left[1 + \frac{1}{\omega^2 \tau_1^2} + \omega^2 \tau_2^2 + \frac{2K_b}{3K_s} \right]^{-1/2}$$

geometric correction term

$$\tau_1 = \tau_s$$

$$\tau_2^2 = \tau_\theta^2 + \tau_h^2 + \tau_{int}^2$$

Time to reach thermal equilibrium

Sullivan and Seidel, Phys. Rev. **173**, 679 (1968)

$$T_{ac} = \frac{P_0}{2\omega C}\left[1 + \frac{1}{\omega^2\tau_1^2} + \omega^2\tau_2^2\right]^{-1/2}$$

$$\tau_1 = 3sec, \tau_2 = 7 \times 10^{-4} sec$$

$$\omega^2\tau_2^2 \ll 1$$

Slow enough for heater and thermometer to catch up sample temperature

$$\omega\tau_1 \gg 1$$

Quick enough for sample to decouple from thermal bath

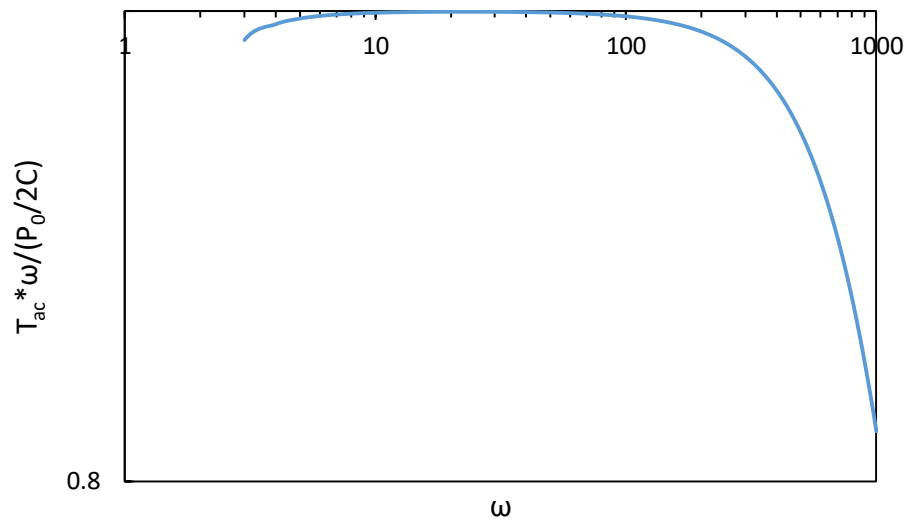

$$f = \frac{\omega}{2\pi}$$

2Hz – 20Hz for this case

$$T_{ac}\left(\frac{P_0}{2\omega C}\right)^{-1} \sim 1$$

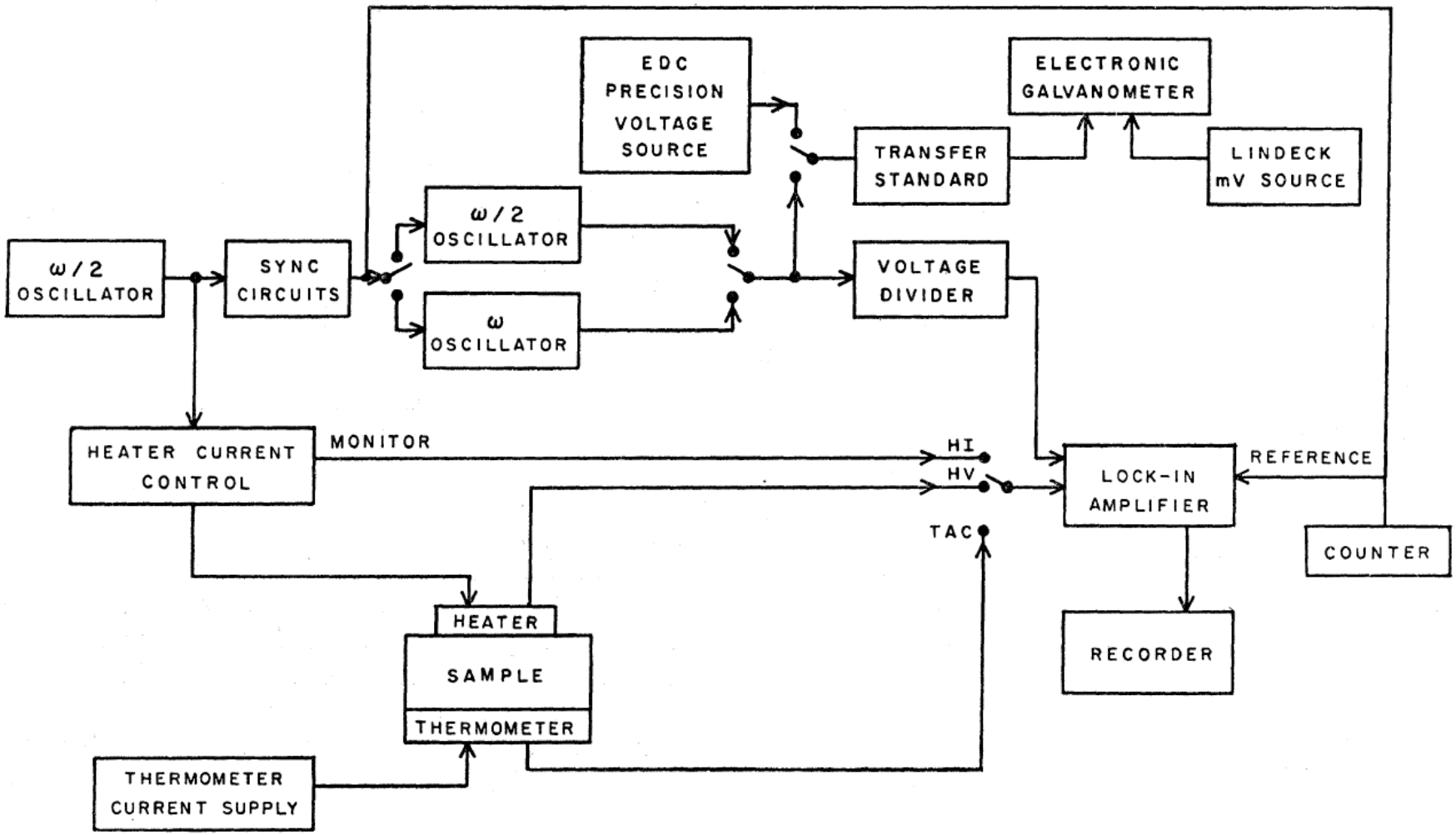

Sullivan and Seidel, Phys. Rev. **173**, 679 (1968)

Sample: 20 µm
Thermocouple: 12 µm
Heating wire: 3 µm

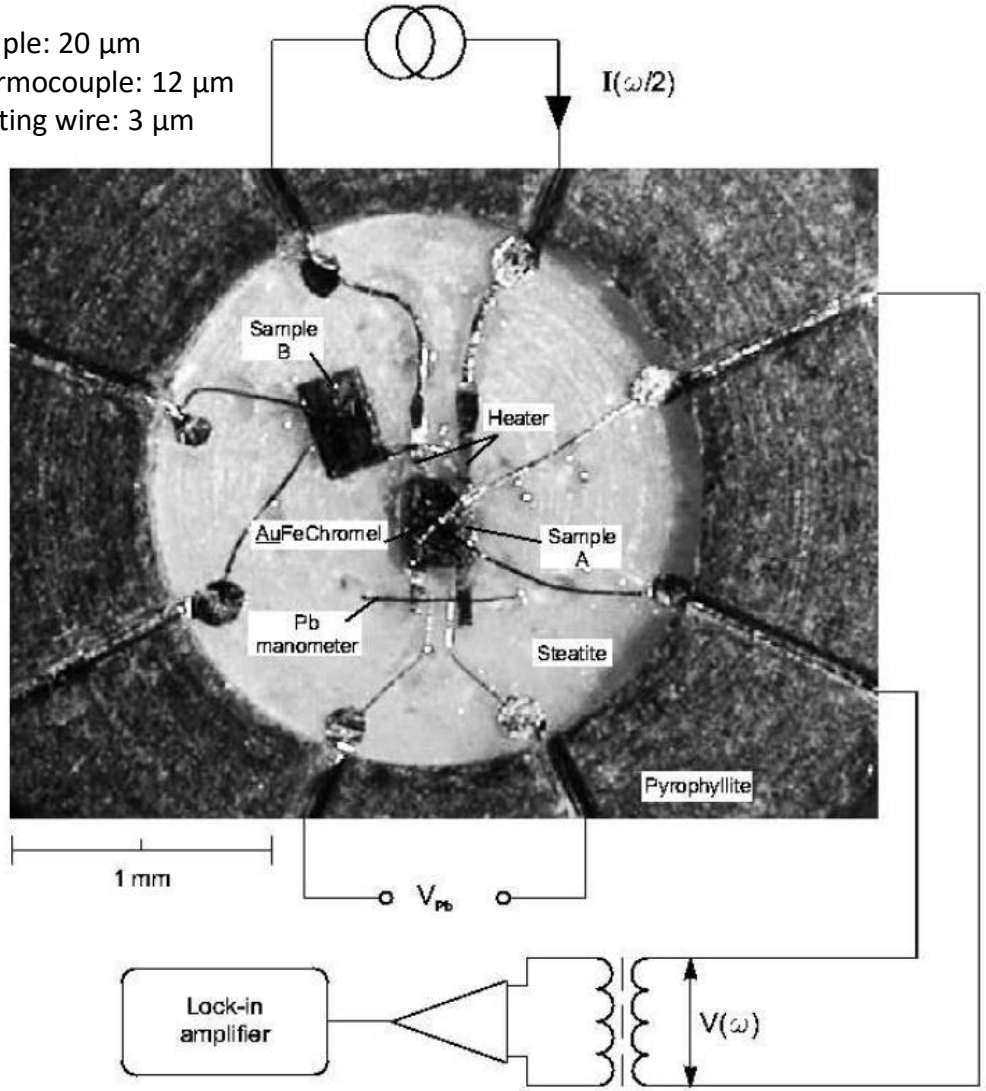

Advances in Solid State Physics. Springer, Berlin, Heidelberg, 2003. 889-913.

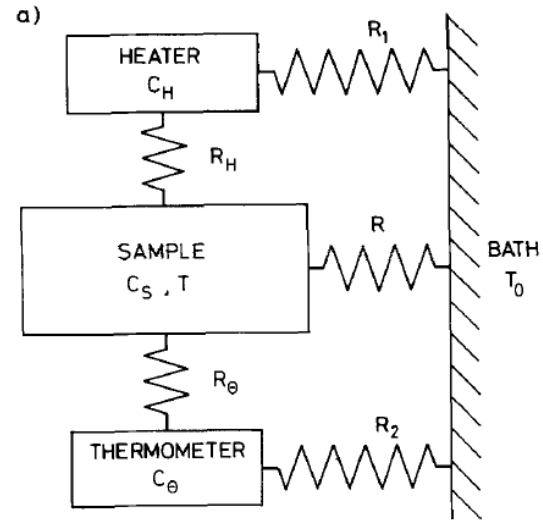

$$T_{ac} = \frac{\dot{Q}_0}{2\omega C}\left[1 + \frac{1}{\omega^2\tau_1^2} + \omega^2\tau_2^2 + \frac{2K_b}{3K_s}\right]^{-1/2}$$

$$+\ 2(R_H/R_1 + R_\theta/R_2)$$

Drawbacks

(i) Thermocouple calibration

(ii) Absolute value

Eichlerand Gey, Rev. Sci. Instrum. **50**, 1445 (1979)

Current directly applied to sample $CePd_{2+x}Ge_{2-x}$

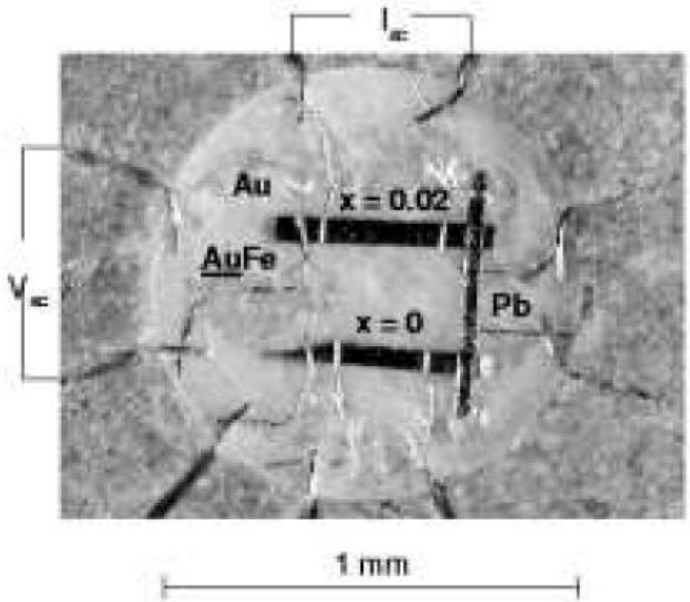

Antiferromagnetic transition T_N vs P

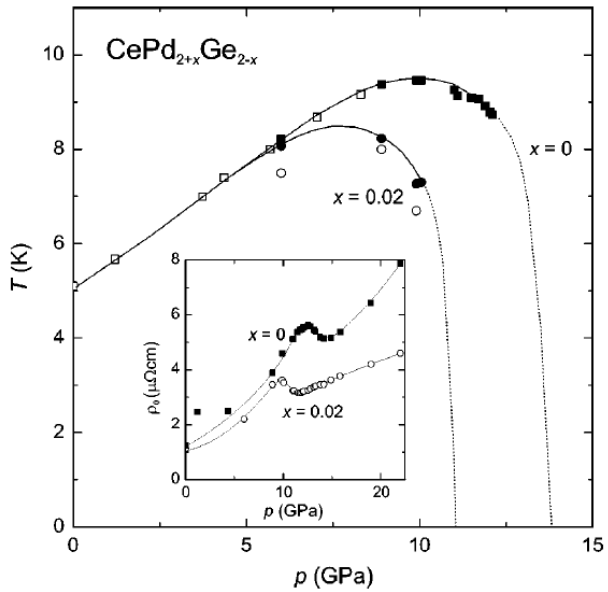

- C(T) vs. ρ(T)
- ∇T
- ∇P

For x = 0.02, open circle by ac calorimetry, filled circle by resistivity
For x = 0, open and filled square are two samples measured by resistivity

Advances in Solid State Physics. Springer, Berlin,Heidelberg, 2003. 889-913.

PHYSICAL REVIEW B 66, 064428 （2002）H. Wilhelm and D. Jaccard

Unpressurized thermometer

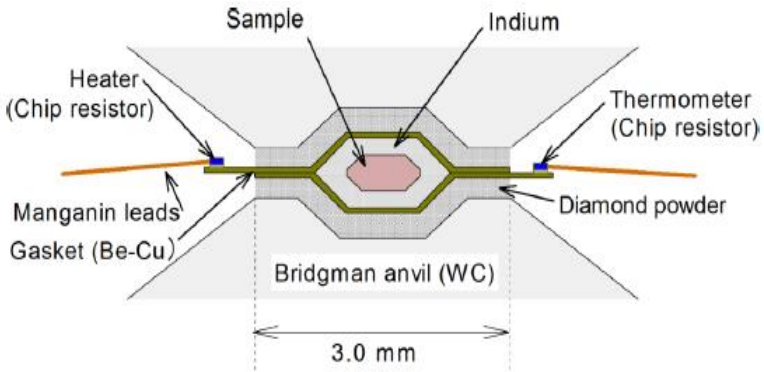

FIG. 1. Cross-section of the Bridgman anvil cell for the AC calorimetric measurement.

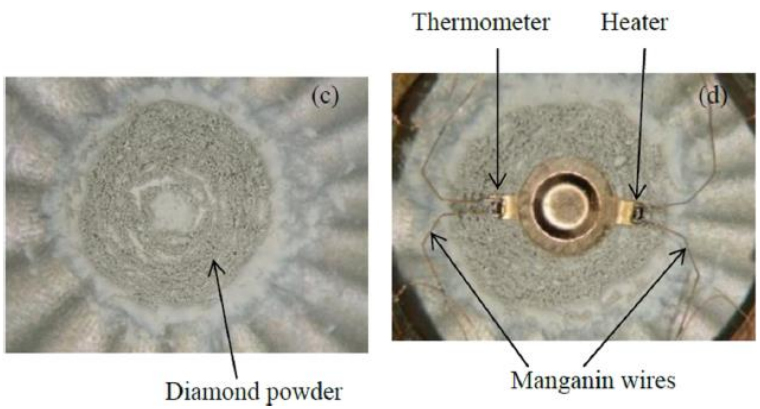

Grain size 0.25 µm.

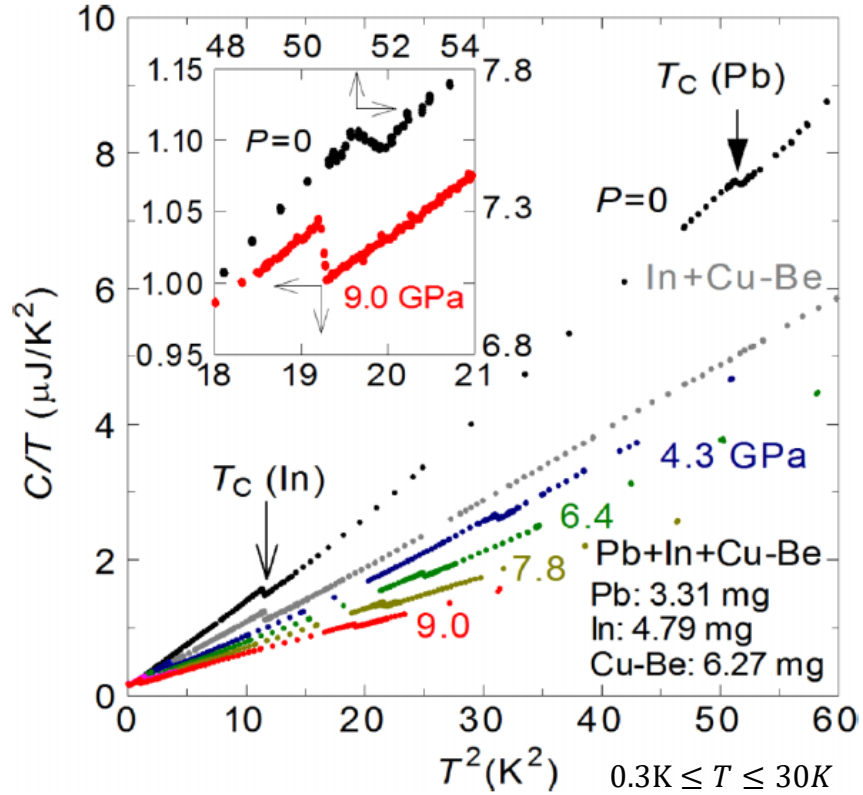

$C_s = C_{tot} - C_{background}$

Kazunori Umeo, REVIEW OF SCIENTIFIC INSTRUMENTS 87, 063901 (2016)

Conclusion

- Sensitive to heat capacity change
- Absolute value not as accurate as adiabatic calorimetry
- Suitable in pressure cell

Thank you for attentions

Questions?