PRESSURE – II-III

590B F09

Sergey L. Bud'ko

(Сергей Леокадьевич Будько)

Research (low temperature) cells

Pressure synthesis

Pressure generation

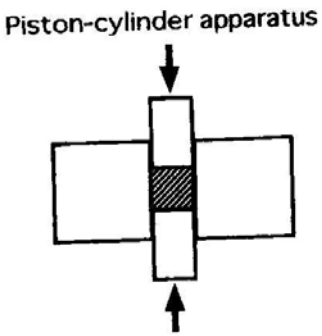

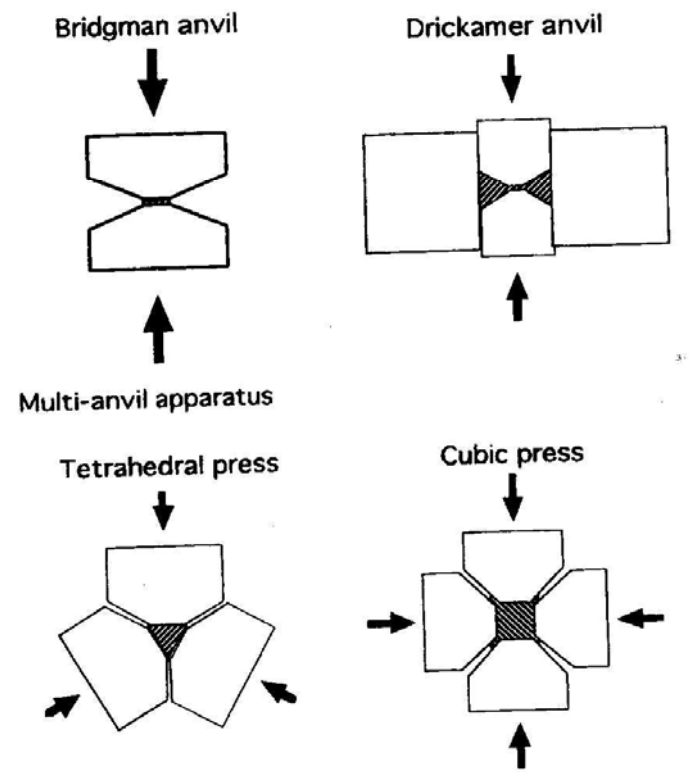

Media:

gas

liquid

solid

Technical achievements (high pressure) associated with P. W. Bridgman (reminder)

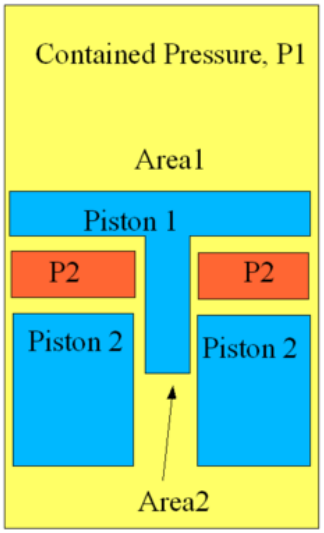

The Bridgman unsupported area high pressure s

P1 * Area1 = P2 * (Area1 – Area2)
Area1-Area2 ≤ Area1
Hence P2 ≥ P1
Hence viscous material at P2 seals P1

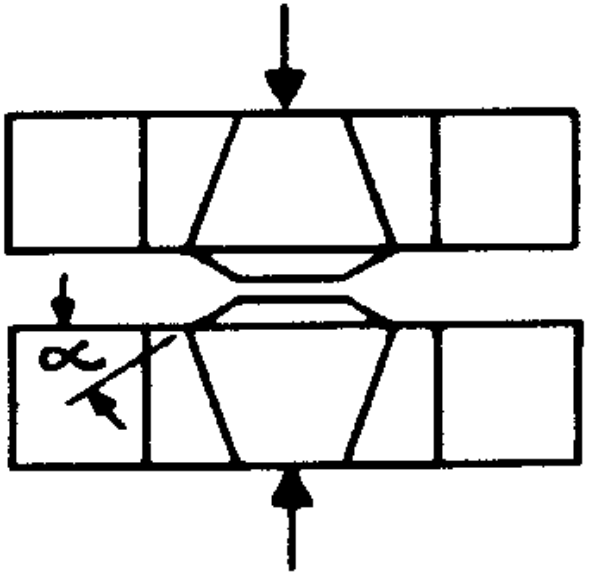

Bridgman anvils

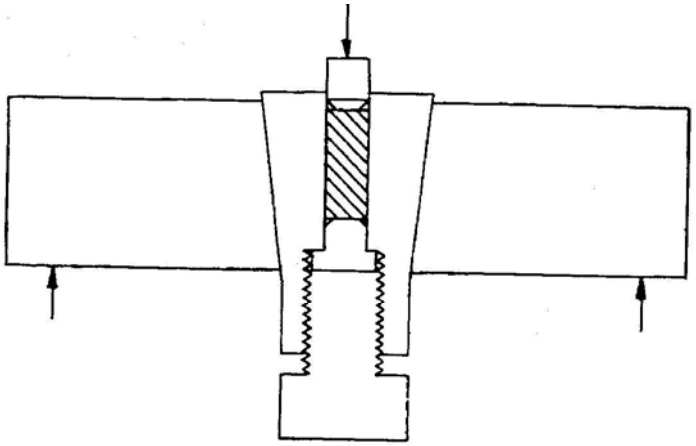

Illustrating the general principle of the method for giving external support to the pressure vessel in such a way that support increases automatically with the increase of internal pressure.

Pressure generation - materials

Tungsten carbide – somewhat magnetic, very hard, brittle (+A)

Tool steel – magnetic, brittle

Maraging steel - magnetic

MP35N – slightly magnetic

Ni-Cr-Al (40ХНЮ-ВИ) – less magnetic, not easy to get

Cu-Be alloy (C17200) – low susceptibility but DOE does not like it

Ti – alloys – low susceptibility but superconductivity and ductile-brittle transition

Cu-3%Ti alloy – very low susceptibility but try to get it

Sapphire (A)

Moissanite (A)

Diamond (A)

*** A = anvils**

Pressure generation - intensifier

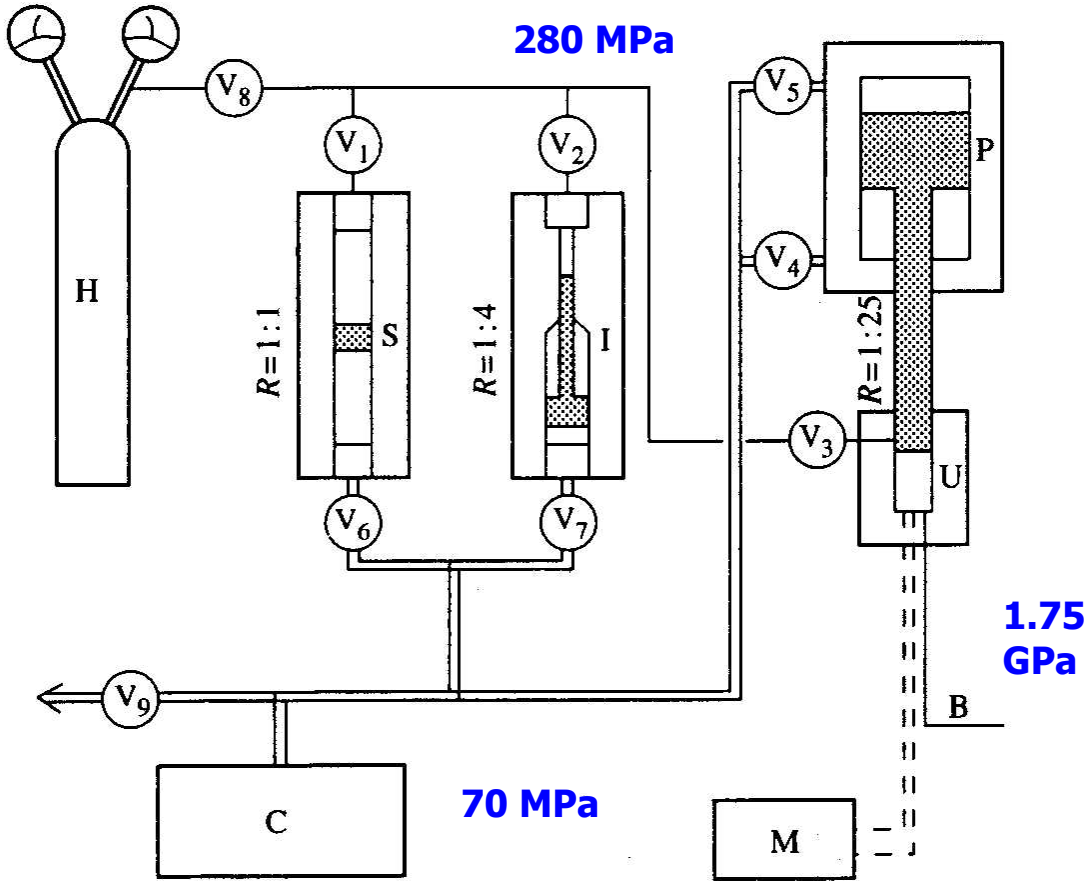

A schematic layout of an intensifier system: (B) to experimental cell, (C) low-pressure compressor (70 MPa), (I) intensifier cylinder, (M) resistance manometer, (P) main oil ram and press, (S) separator cylinder, (U) compression cylinder, and (V) valves. Here, *R* is the multiplication ratio of the cylinders.

Complex

Requires heavy duty tubes going into dewar

DOE regulations – "pressure vessels"

Can have "true hydrostatic" gas/liquid pressure

Helium pressure cell

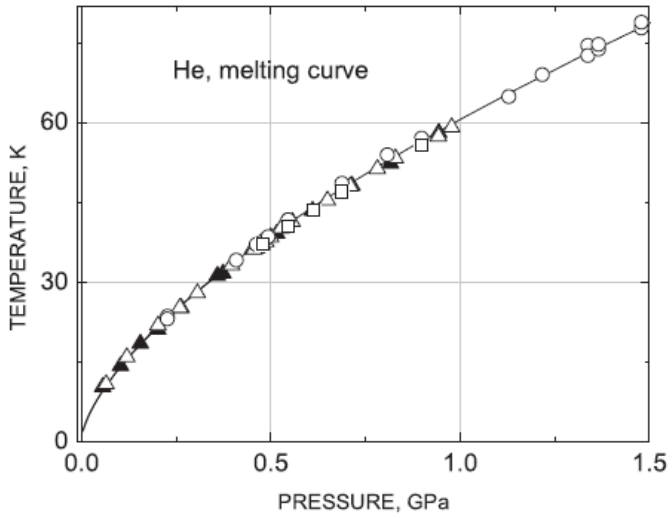

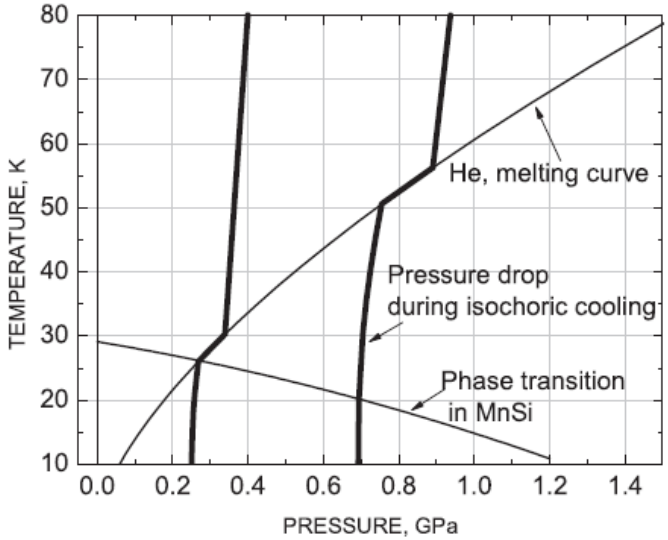

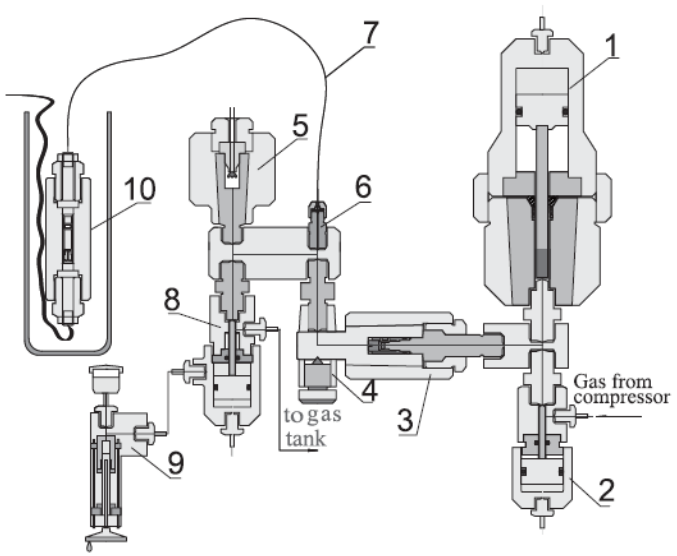

General view of high pressure helium gas installation: 1) intensifier, 2) inlet valve, 3) check valve, 4) check valve holder, 5) manganin bomb, 6) connector for high pressure tubing, 7) high pressure tubing 8) relieving valve , 9) oil screw pump, 10) experimental cell.

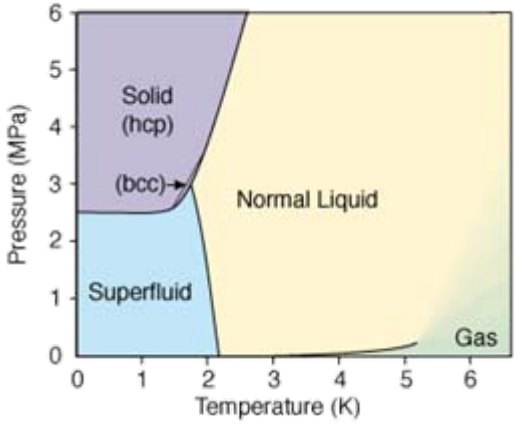

Pressure generation – ice bomb

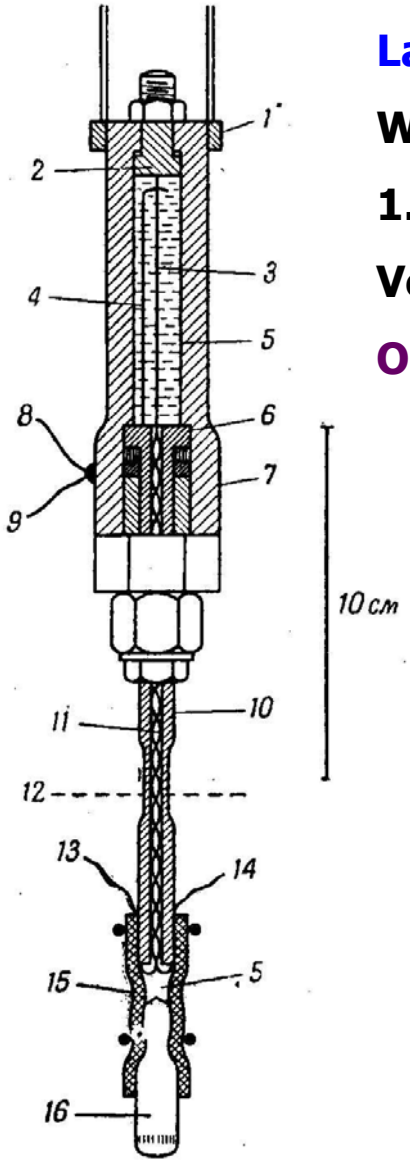

Lazarev & Kan, 1944

Water as pressure medium

1.7 kbar (? 1.9 kbar)

Very simple

One pressure point

Some of us thought that the ice bomb belongs to *Kunstkammer* … but

Body – Ti alloy

Pressure medium – Ga

P ~ 4 kbar

Meas. Sci. Technol. 7 (1996) 1079–1082. Printed in the UK

A miniature pressure cell for a SQUID magnetometer

S Reich and T Godin

Department of Materials and Interfaces, The Weizmann Institute of Science, Rehovot, Israel

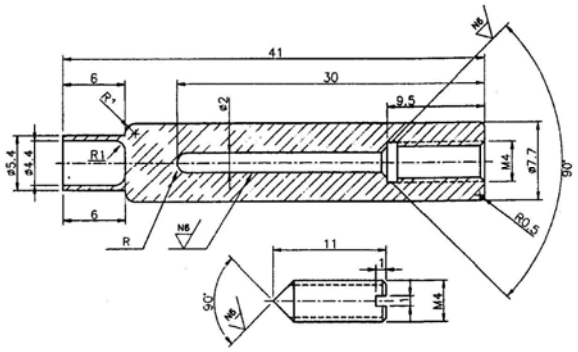

Pressure clamp

Can be very simple (no leads are needed, Teflon capsule filled with liquid medium)

P_{max} ~ 1 GPa

Ames Lab (MP35N or CrNiAl)

EasyLab (Be-Cu)

Pressure clamp

Cir. 1953, 20 kbar

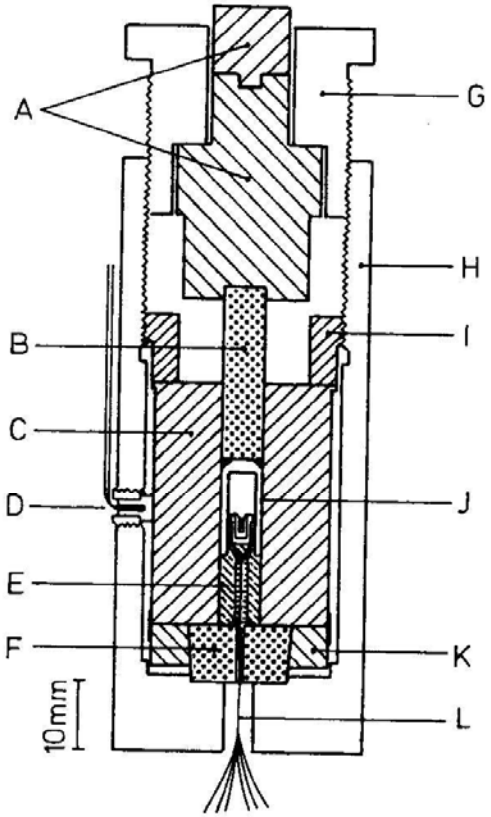

Simple clamp cell for use to 3 GPa. A—compressing shaft, B—piston (tungsten carbide), C—cylinder (Be–Cu), D—thermocouple, E—electrode plug, F—backing plate, G—lock nut, H—holder, I—supporting ring, J—Teflon bucket, K—binding ring, L—leads. (Reproduced by kind permission of the American Institute of Physics.)

For a long time was (and still is) a workhorse for 20 kbar high pressure/low temperature work

Similar units: USA, Europe, USSR

Relatively simple

Compact

Non-magnetic

Teflon capsule

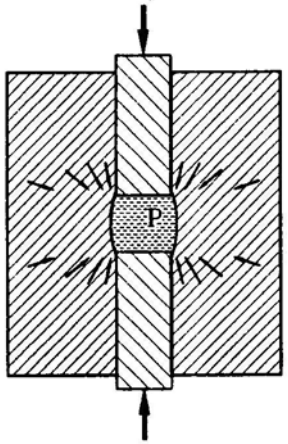

Extended support
D>>d

Pressure clamp - seals

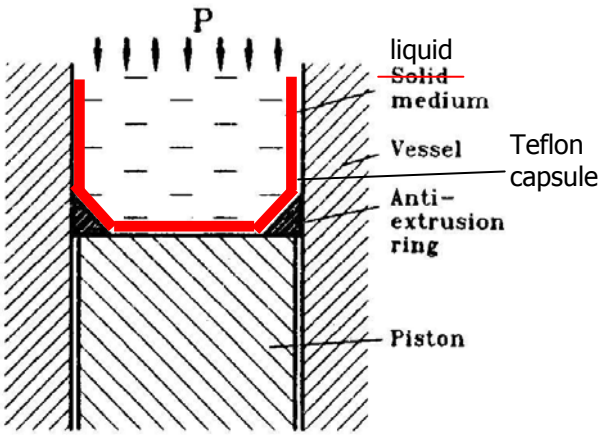

Anti-extrusion ring assembly.

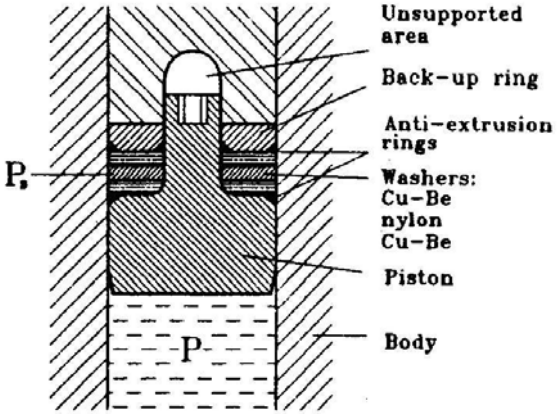

Mushroom-type seal.

Cone!

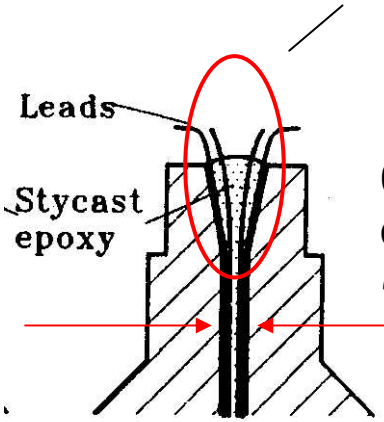

0.8 mm diameter; ~ 12 wires

Electical fedthroughs

STYCAST 2850 FT works fine

(do not try 5 min Epoxy)

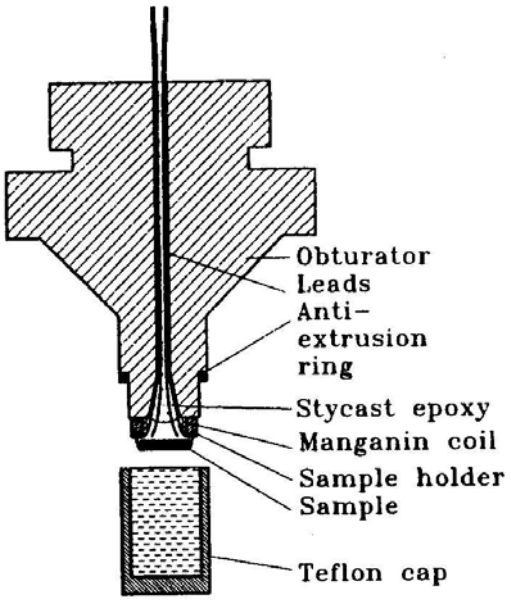

Pressure clamp - windows

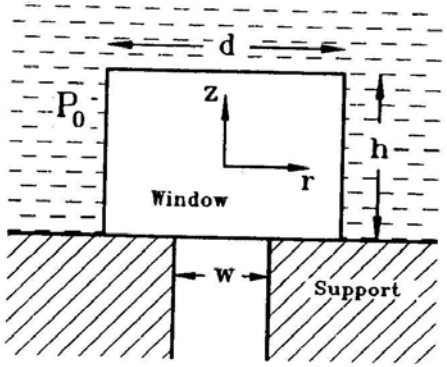

Cross-section of a Poulter window.

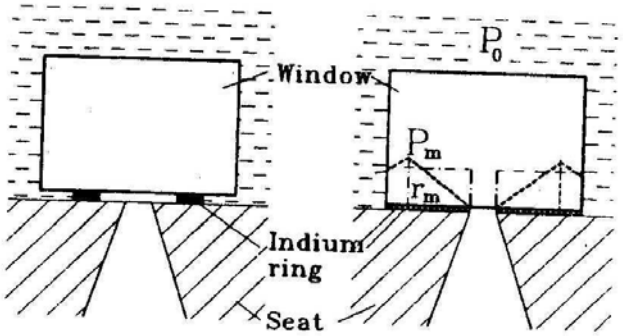

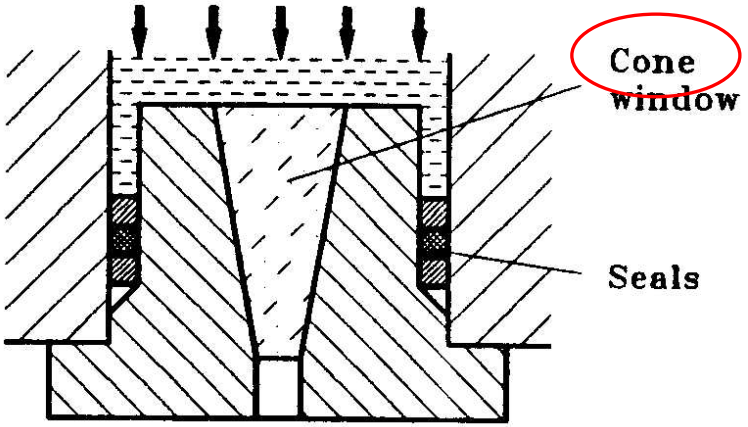

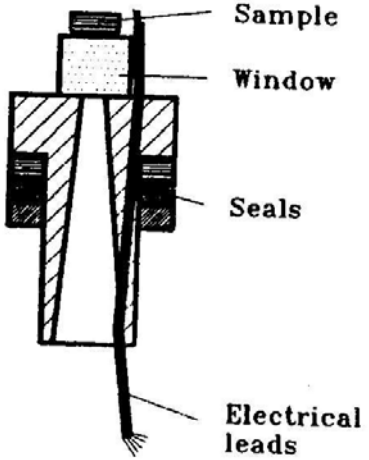

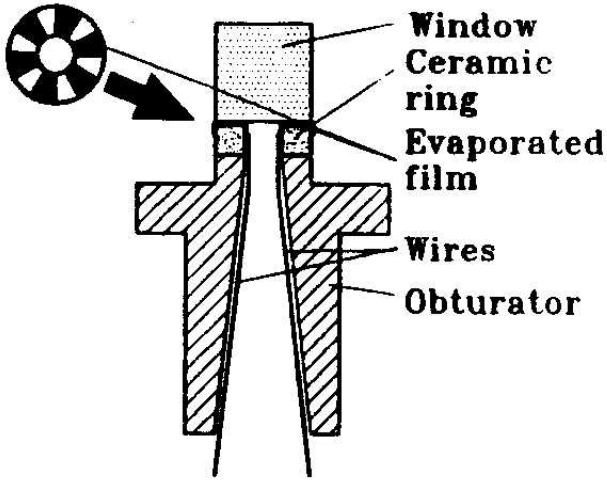

window + wires

Not easy but doable.

Also – T-shaped cell was in use

Clamp – temperature dependence of pressure

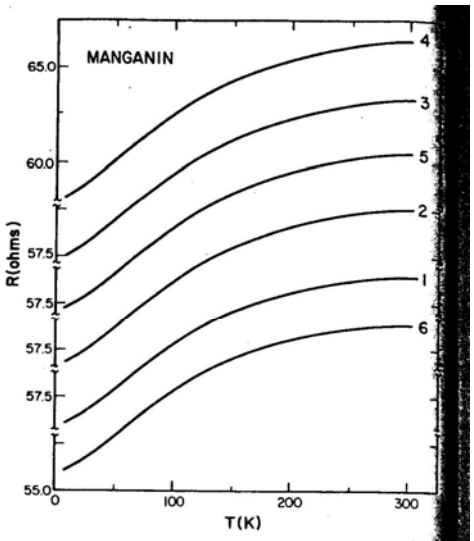

Resistance as a function of temperature for a manganin pressure gauge at six different clamp pressures. Numbers beside the curves correspond to the order in which they were taken. The sequence 6-1-2-5-3-4 corresponds to progressively increased clamp pressure at room temperature.

THOMPSON JD
REVIEW OF SCIENTIFIC INSTRUMENTS Volume: **55** Pages: **231-234** Published: **1984**

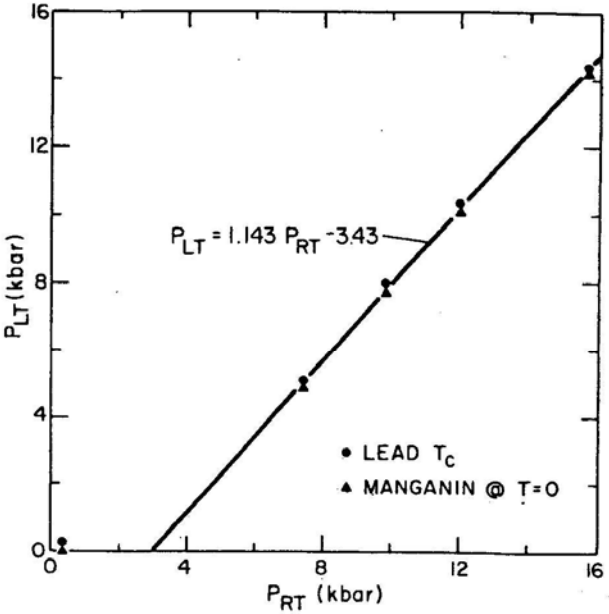

Low-temperature pressure P_{LT} as a function of the corresponding room-temperature pressure P_{RT}. P_{LT} is shown for both the lead manometer (●) and the manganin gauge (▲).

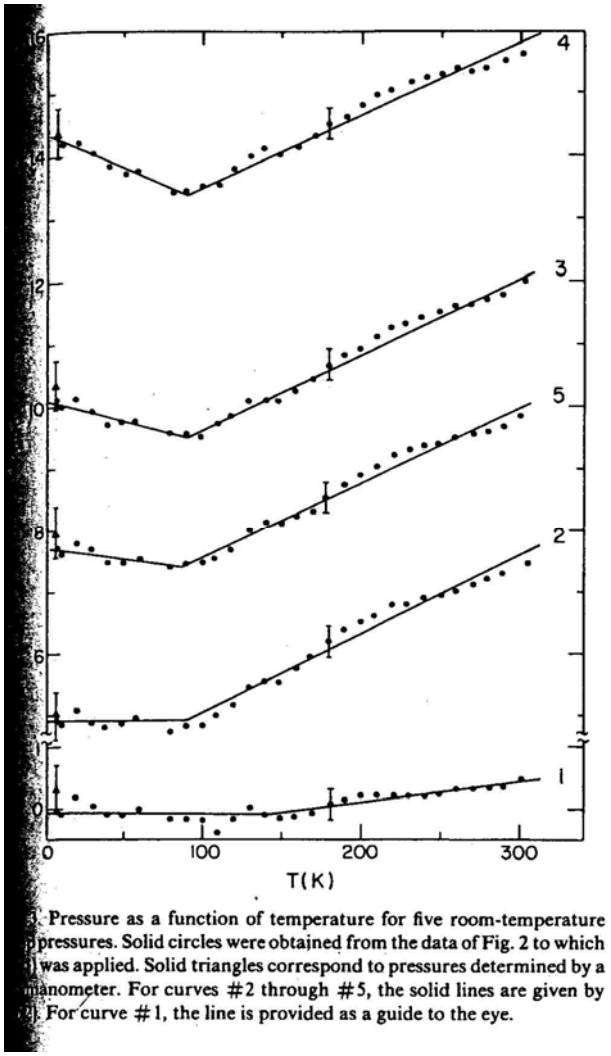

Pressure as a function of temperature for five room-temperature pressures. Solid circles were obtained from the data of Fig. 2 to which [illegible] was applied. Solid triangles correspond to pressures determined by a manometer. For curves #2 through #5, the solid lines are given by [illegible]. For curve #1, the line is provided as a guide to the eye.

Pressure decreases with temperature decrease down to ~100 K

ΔP < 4 kbar, decreases with pressure

Materials/media dependent…

Two-layer cell

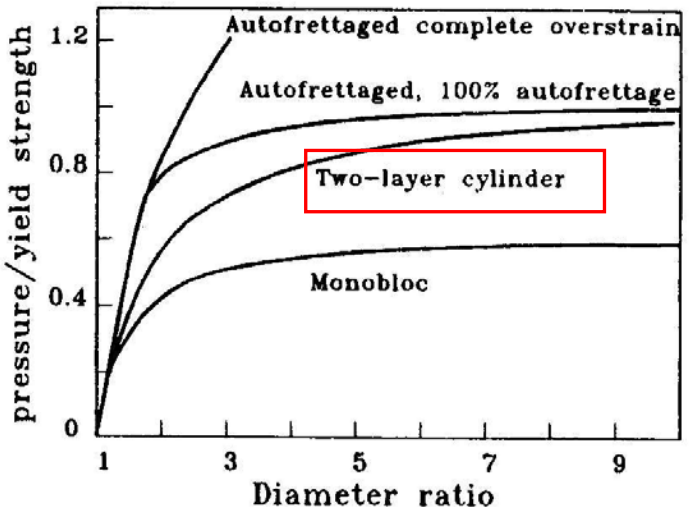

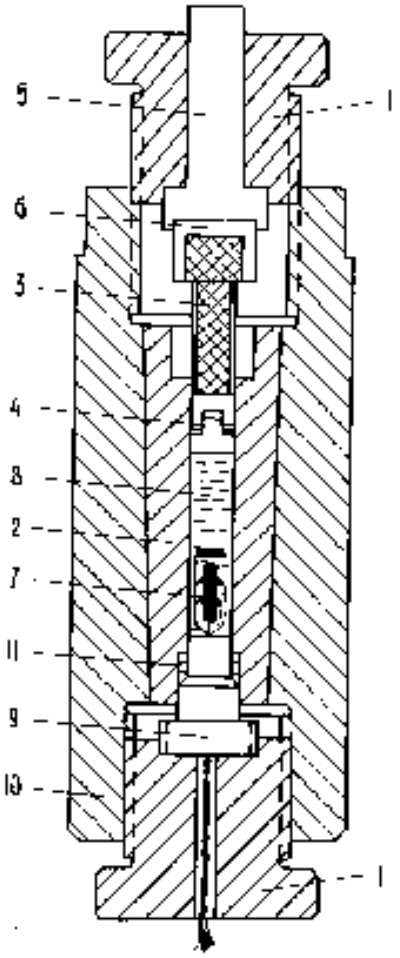

30+ kbar, possible optical access

USSR – 1980 (Efim Itskevich et al.) ; later UK, USA, Japan

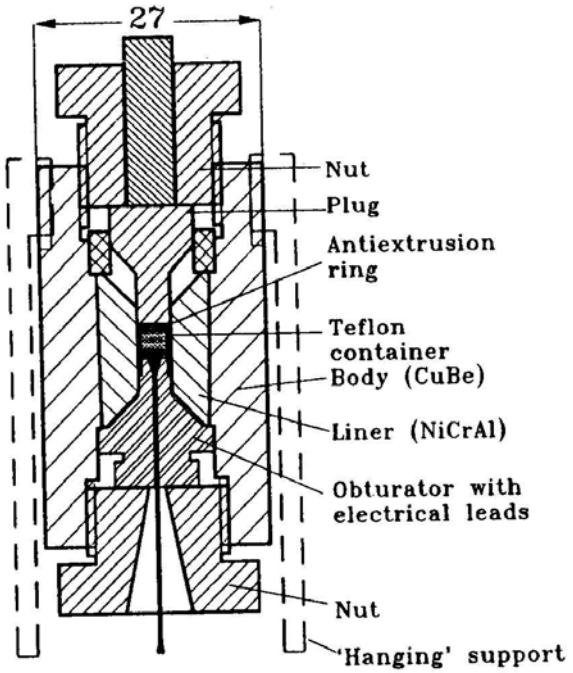

1–fixing nut, 2-inner cylinder (insert),3-piston,4-Bridgman packing, 5-shaft,transmitting force from press, 6-thrust plate, 7-specimen, 8-transmitting medium, 9-stop, 10-support shell, 11-stop packing.

Bridgman cell

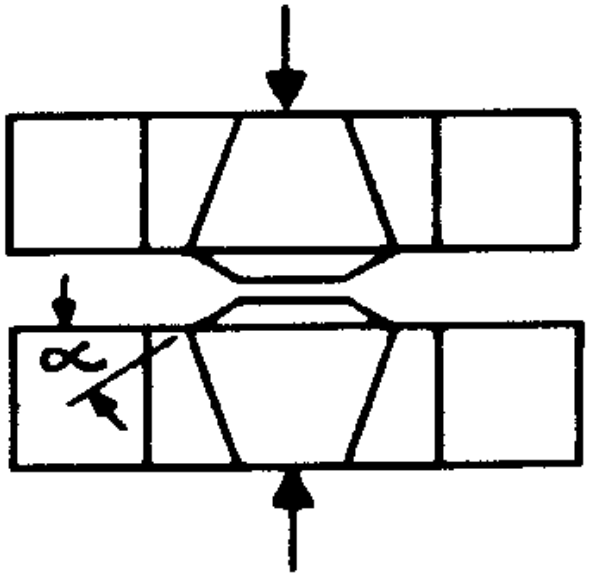

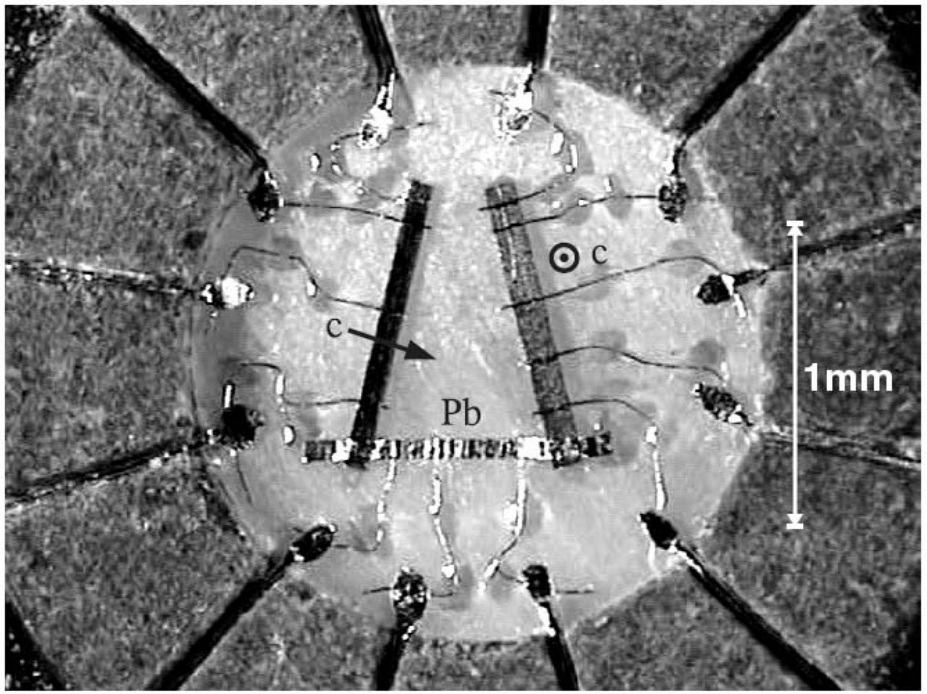

medium - steatite

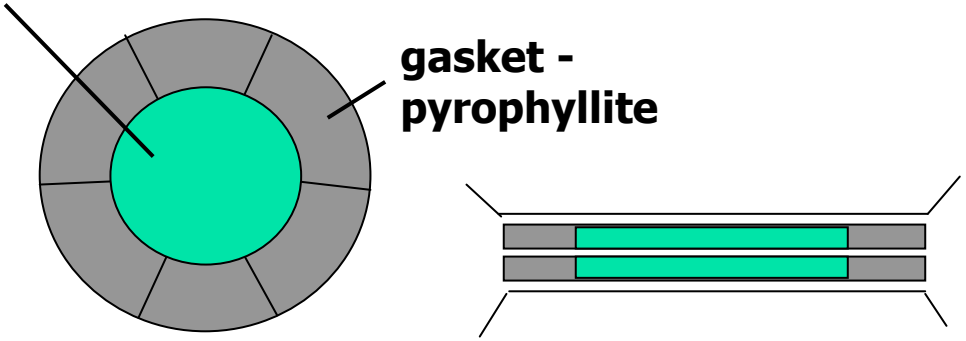

P_{max} ~ 120 kbar, quasihydrostatic, resistance, TEP, heat capacity

Modified Bridgman cell

want to have pressure in liquid

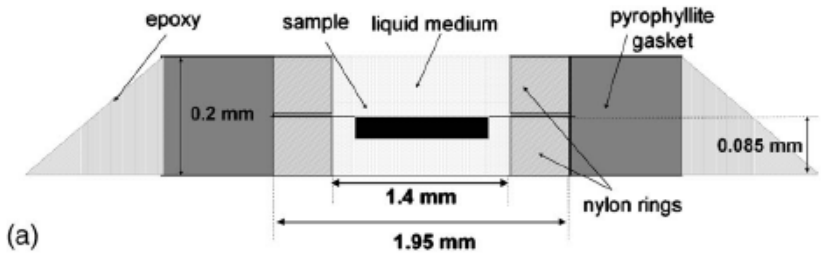

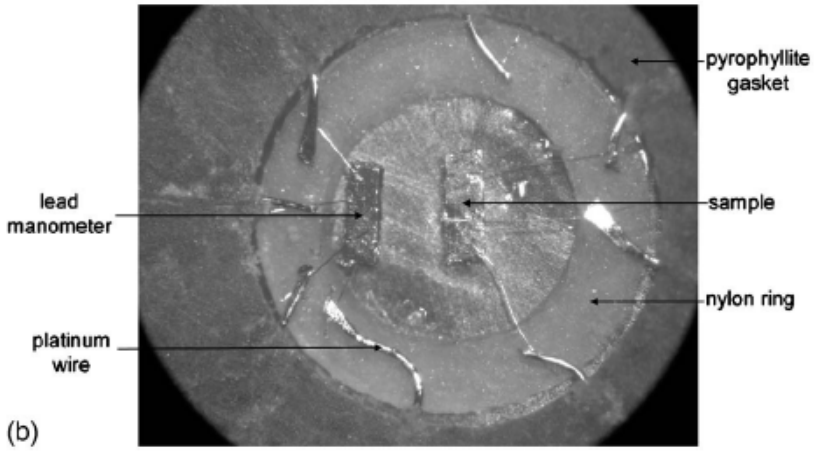

(a) side view and (b) top view of the chamber with sample (right) and lead (left).

REVIEW OF SCIENTIFIC INSTRUMENTS **78**, 093903 (2007)

Simple adaptation of the Bridgman high pressure technique for use with liquid media

E. Colombier and D. Braithwaite
Département de Recherche Fondamentale sur la Matière Condensée, SPSMS, CEA-Grenoble, 17 rue des Martyrs, 38054 Grenoble, France

TABLE I. Total number of tests and typical pressure values and pressure gradient ranges with each medium tested. Values given are for a standard procedure where the cell was loaded first to 30 kN, then to 40 kN. The anvil diameter is 3.5 mm and the inner chamber diameter is 1.4 mm.

Medium	Number of tests	P (GPa) (F=40 kN)	ΔP (GPa)	Remarks
FC84	3	4.4–4.8	0.1–0.35	Sometimes crystallizes
1:1 FC84:FC87	6	4.9	0.2	
1:1 FC 70:FC77	9	4.9	0.15	
DC 200 1 cS	2	4.4	0.2–0.3	Sometimes crystallizes
DC 200 20 cS	2	/	/	Always explodes (too high viscosity, low compressibility?)
DC 200 1:1 1cS: 0.65 cS	2	5.6	0.25	
1:1 pentane: isopentane	4	4.5	0.15	
4:1 Methanol:Ethanol	2	/	/	Wires break (compressible and dissolves epoxy)
Nitrogen	3	/	/	Wires break (too compressible?)
Daphne oil	2	/	/	Always explodes (too high viscosity, low compressibility?)

Talk to Estelle or watch her working

P_{max} ~ 60 kbar

Modified Bridgman cell

No Teflon ring

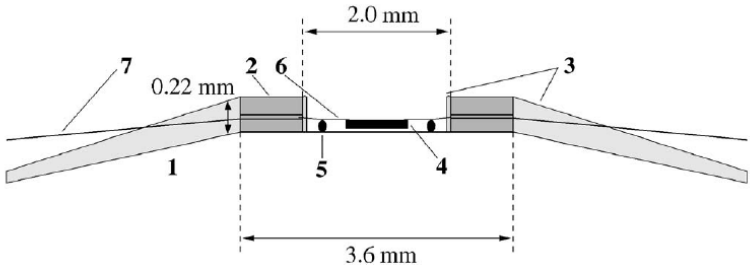

Sectional drawing of the pressure cell. The scale of the vertical axis is doubled with respect to the horizontal axis. 1, anvil; 2, gasket formed by lower and upper pyrophyllite rings; 3, epoxy; 4, sample; 5, support for wire; 6, 10 μm gold wire; 7, 25 μm gold wire.

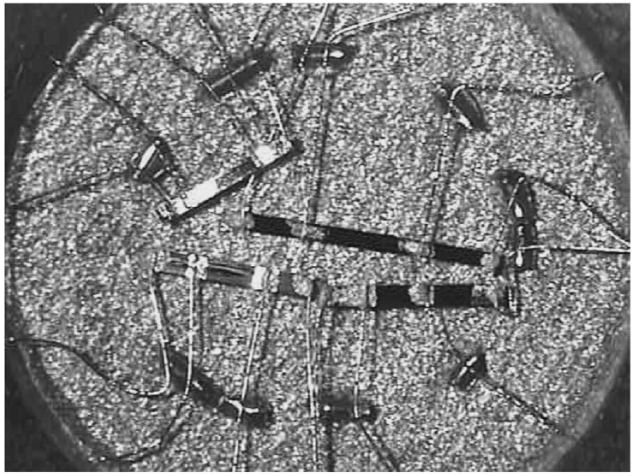

Top view of the pressure cell containing three organic conductors and a lead manometer (in the top left corner).

REVIEW OF SCIENTIFIC INSTRUMENTS **78**, 123901 (2007)

Adaptation of the Bridgman anvil cell to liquid pressure mediums

A.-S. Rüetschi and D. Jaccard
DPMC, University of Geneva, 24 Quai E.-Ansermet, 1211 Genève 4, Switzerland

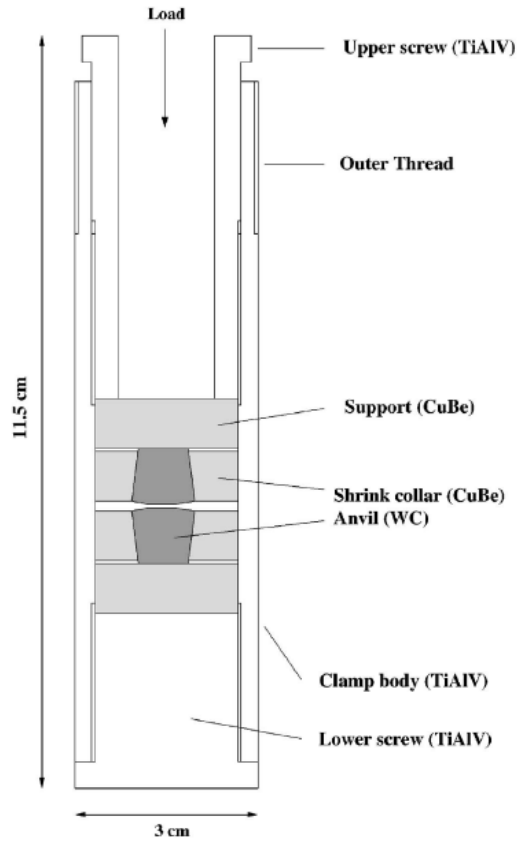

Sectional drawing of the clamp. The outer thread is used to suspend the clamp in a support for pressurization.

P_{max} ~ 60 kbar

Modified Bridgman cell

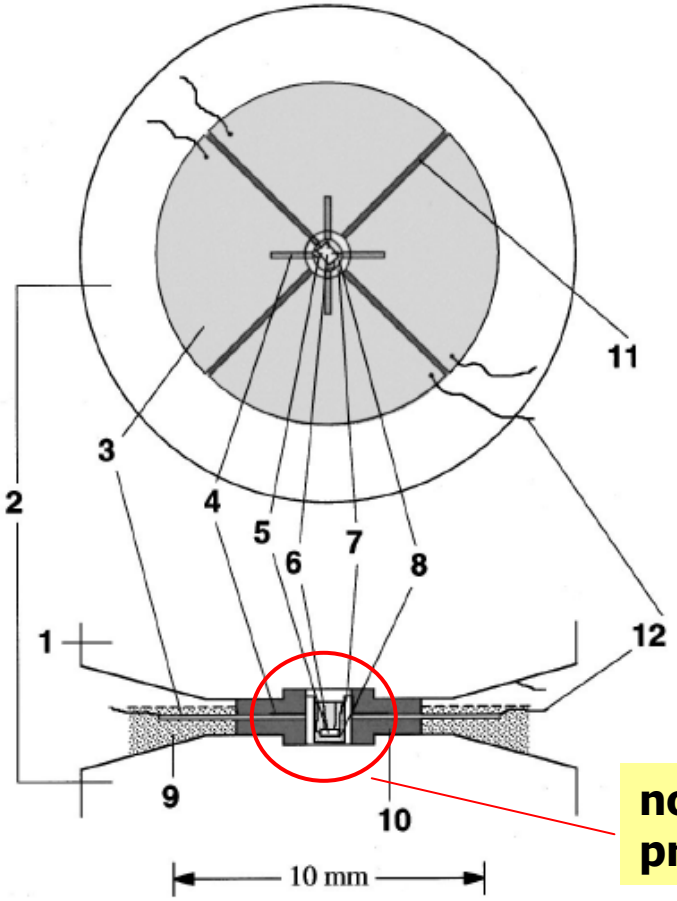

Top and side view of the sample area in the modified Bridgman anvils: 1 is upper anvil, 2: lower anvil, 3: stainless steel, 4: Au foil, 5: Au wire, 6: sample, 7: Teflon capsule, 8: pressure transmitting medium, 9: epoxy resin, 10: pyrophyllite, 11: stycast, and 12: electrical leads.

note anvils' profile

REVIEW OF SCIENTIFIC INSTRUMENTS VOLUME 73, NUMBER 4 APRIL 2002

A newly developed high-pressure cell by using modified Bridgman anvils for precise measurements in magnetic fields at low temperatures

T. Nakanishi,[a] N. Takeshita,[b] and N. Môri[c]
Institute for Solid State Physics, University of Tokyo, 5-1-5 Kashiwanoha, Kashiwa-shi, Chiba 277-8581, Japan

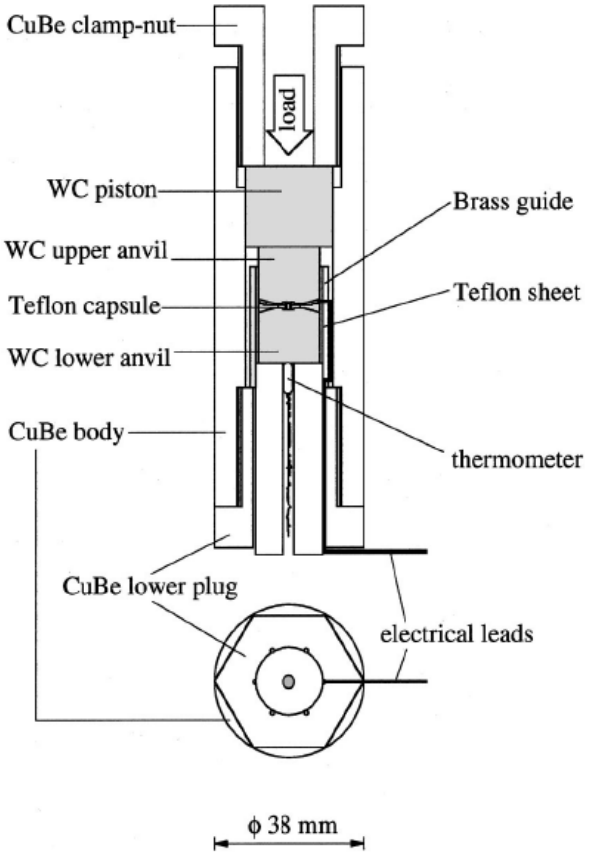

P_{max} ~ 60 kbar

"Chechevitsa" (lentil) pressure cell

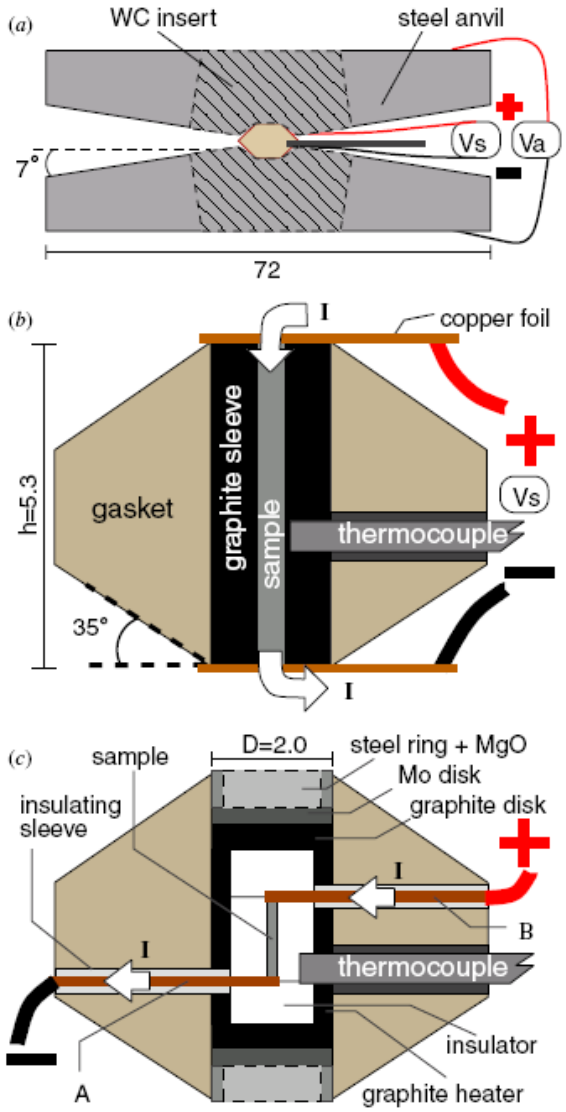

Larger volume

Possible radial access

Circ. 1950s

HPPI - USSR

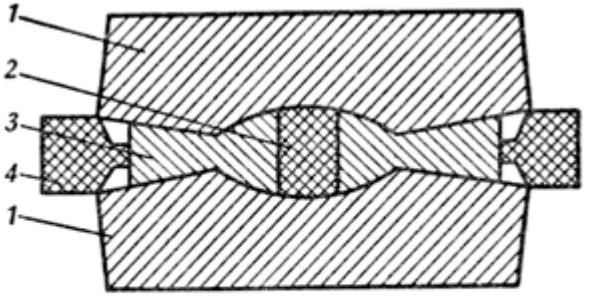

1 — пуансоны;
2—реакционная смесь графита с никелем;
3 — пирофиллитовая прокладка;
4 — муфта

Modified toroid cell

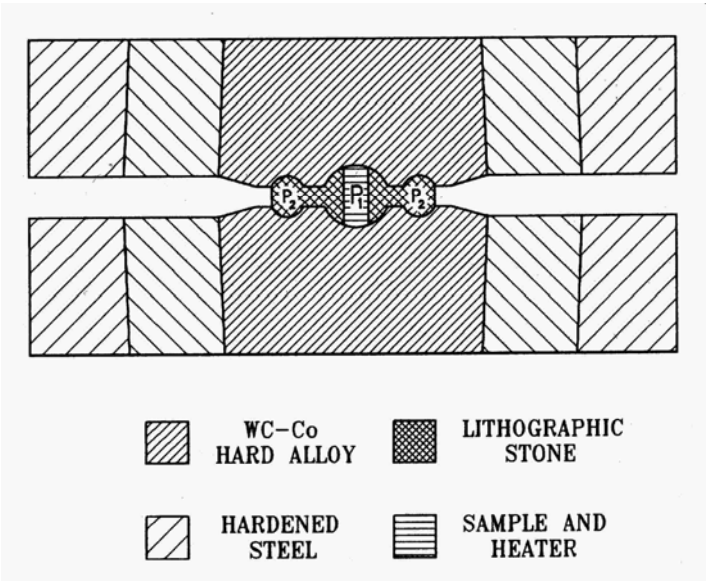

P_{max} ~ 80 kbar

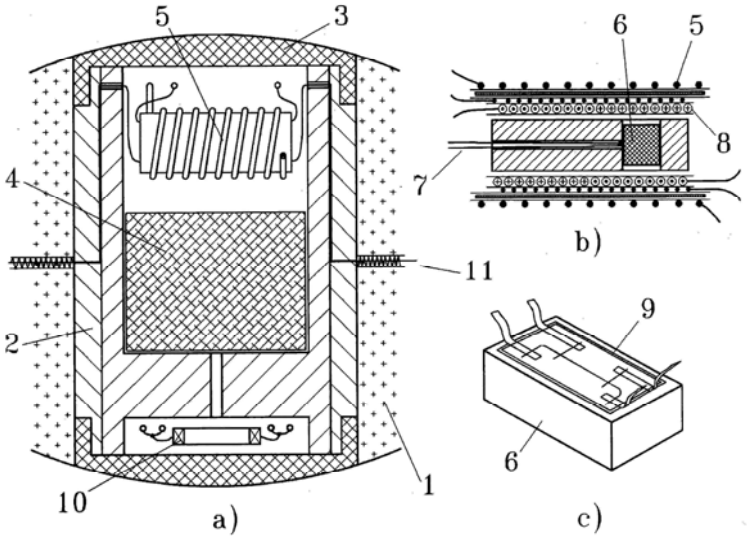

(a) liquid-filled ampoule for studies at hydrostatic pressure and high temperatures; (b) assembly for magnetic measurements placed in the top part of an ampoule; (c) sample with the stain gauge bonded;
1-gasket (lithographic stone), 2-teflon ampoule, 3-lid, 4-thermal insulation (asbestos), 5-heater, 6-sample, 7-thermocouple, 8-coil system for magnetic measurements, 9-strain gauge, 10-manganin pressure gauge, 11-electrical leads.

Lev Khvostantsev et al. – 1970s, Vladimir Sidorov et al. 1980s

Diamond Anvil Cell (DAC)

Artists view

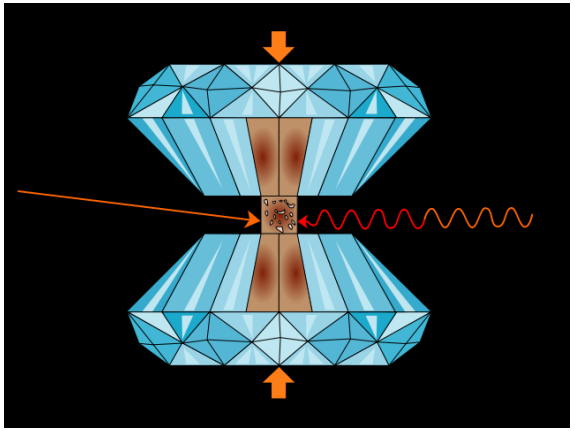

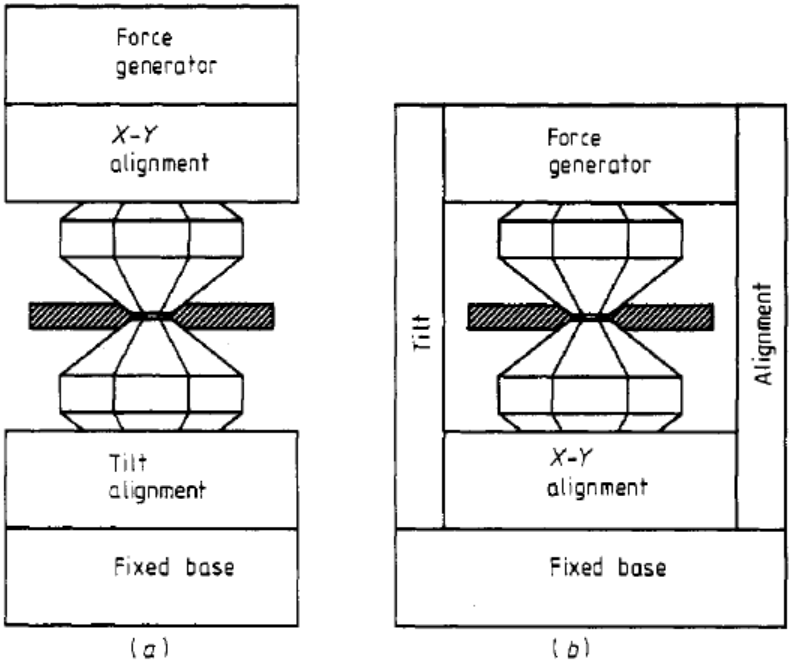

Schematic diagrams of the essential mechanisms of a DAC, showing two alternative layouts. The drive force goes through the alignment mechanisms in (*a*); in (*b*) the tilt alignment mechanism is not under load.

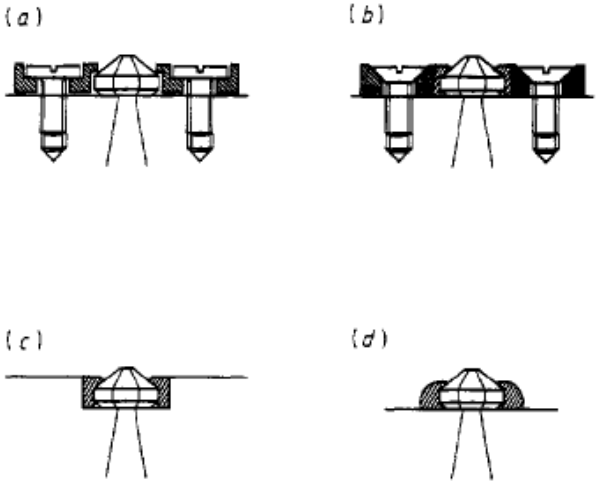

Diamond mounting arrangements: (*a*) a clamp ring; (*b*) a riveted or staked soft ring (e.g. annealed copper) in a fixed ring; (*c*) a soft ring in a counterbore; and (*d*) glue – a ring of epoxy resin around the diamond.

DAC

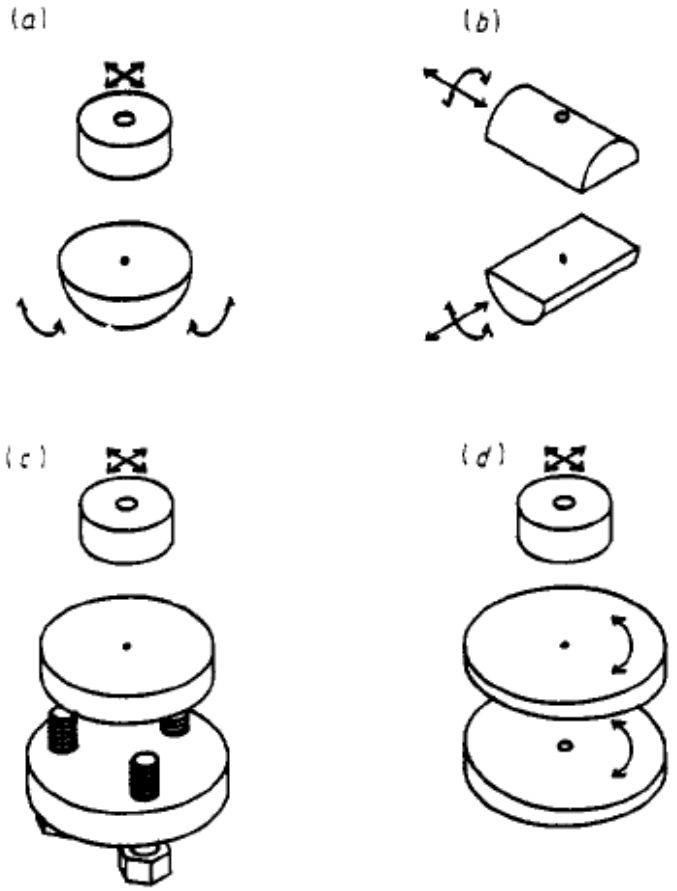

Four tilt and X–Y alignment mechanisms are shown schematically; (*a*) the traditional hemispherical; and (*b*) semi-cylindrical rockers; (*c*) the stand-off screws; and (*d*) rotating wedges.

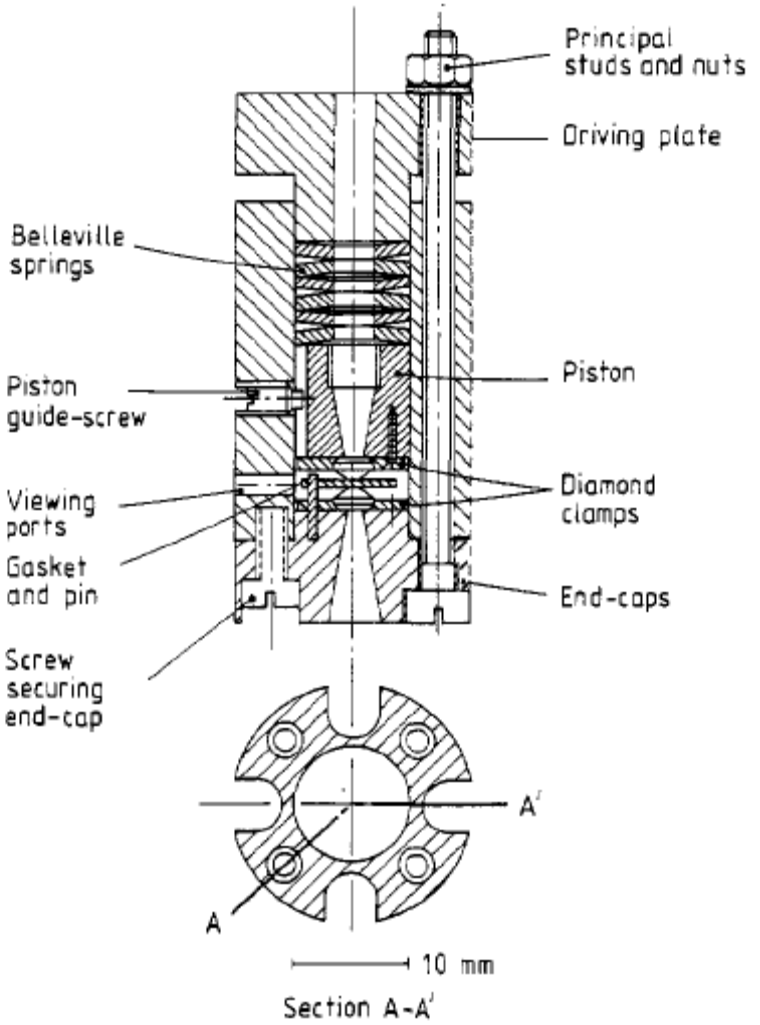

Sectional view of the simple diamond anvil cell.

alignment – very important

DAC

xrd

DAC with membrane

Many different designs

P_{max} – few Mbar

Gaskets – usually metal (Re, Inconnel, …)

Media – gas, liquid, solid (NaCl)

Measurements – optics, X-ray, susceptibility, resistance, heat capacity, etc.

High pressure synthesis

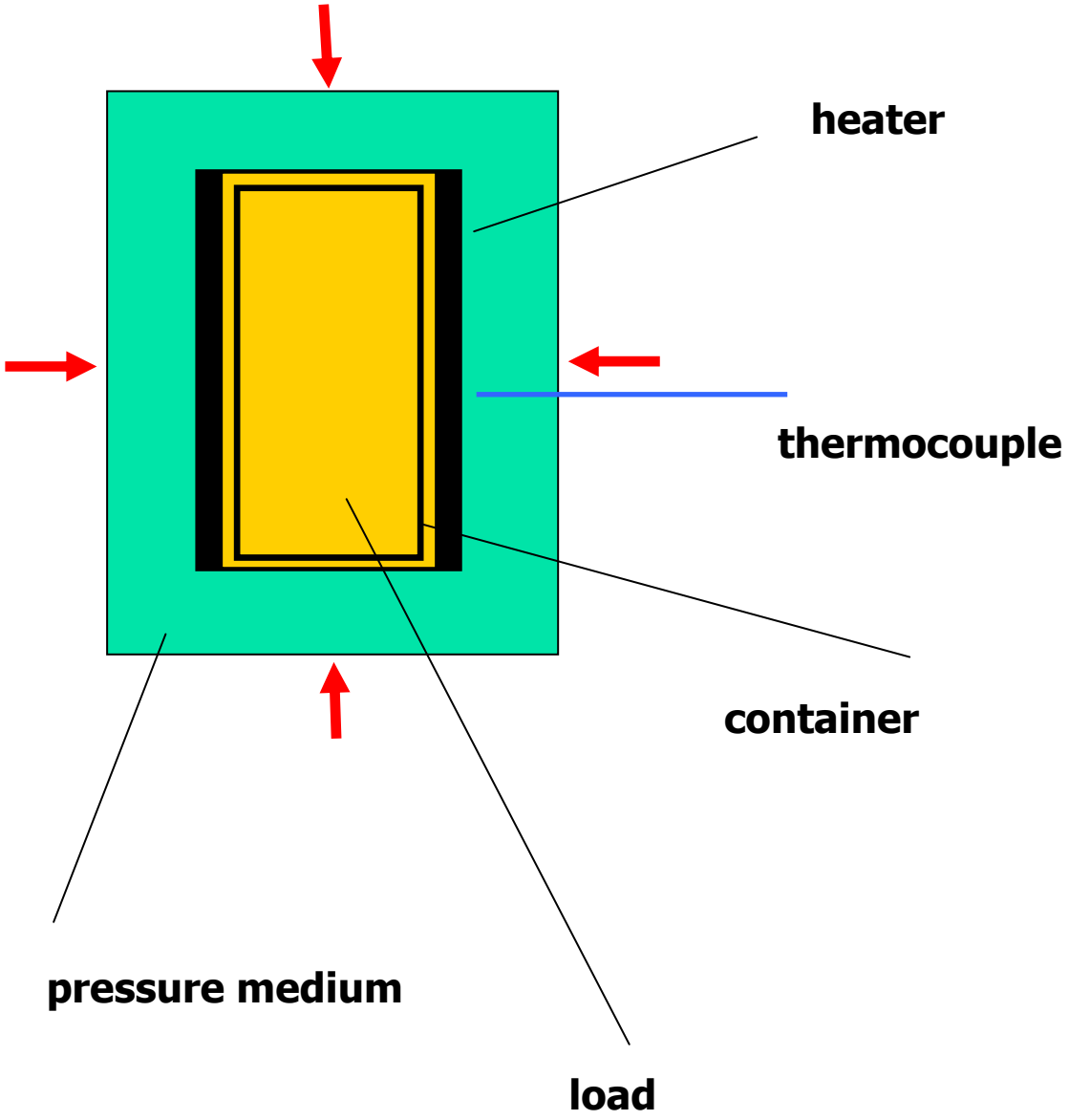

Solid (soft) pressure medium (beware of pressure and temperature gradients)

No size restrictions (want to have sample space as large as possible)

Cooling + high T materials

High pressure synthesis – piston-cylinder

Rockland Research

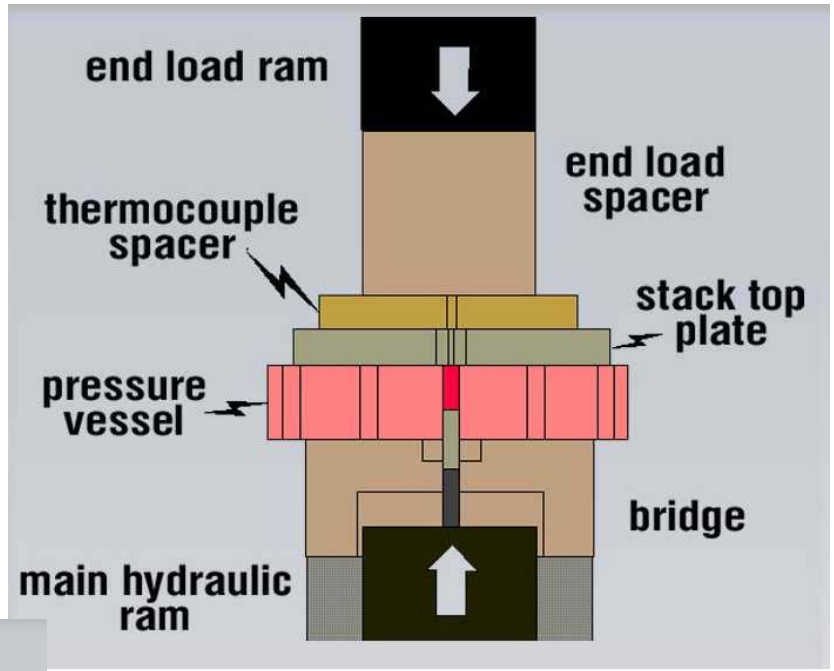

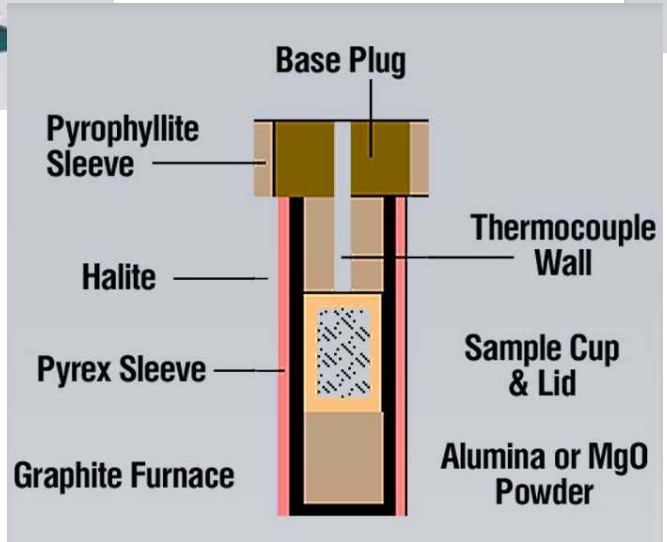

35 kbar, 2000°C

High pressure synthesis – multianvil

Rockland Research

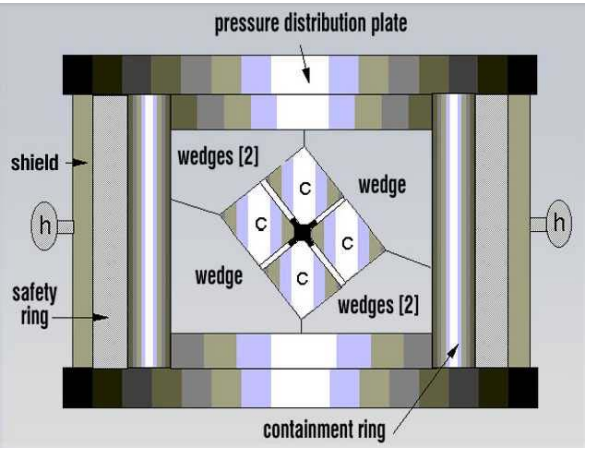

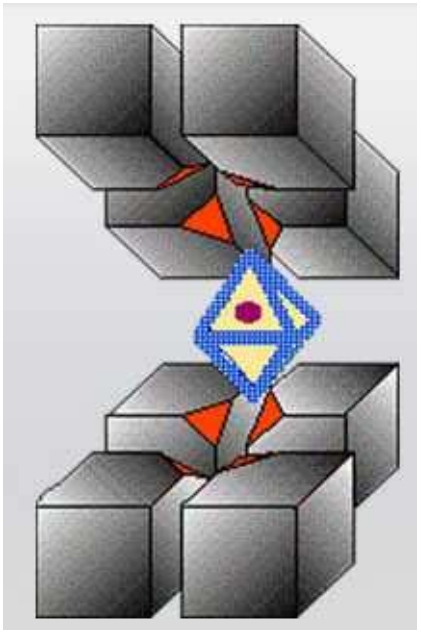

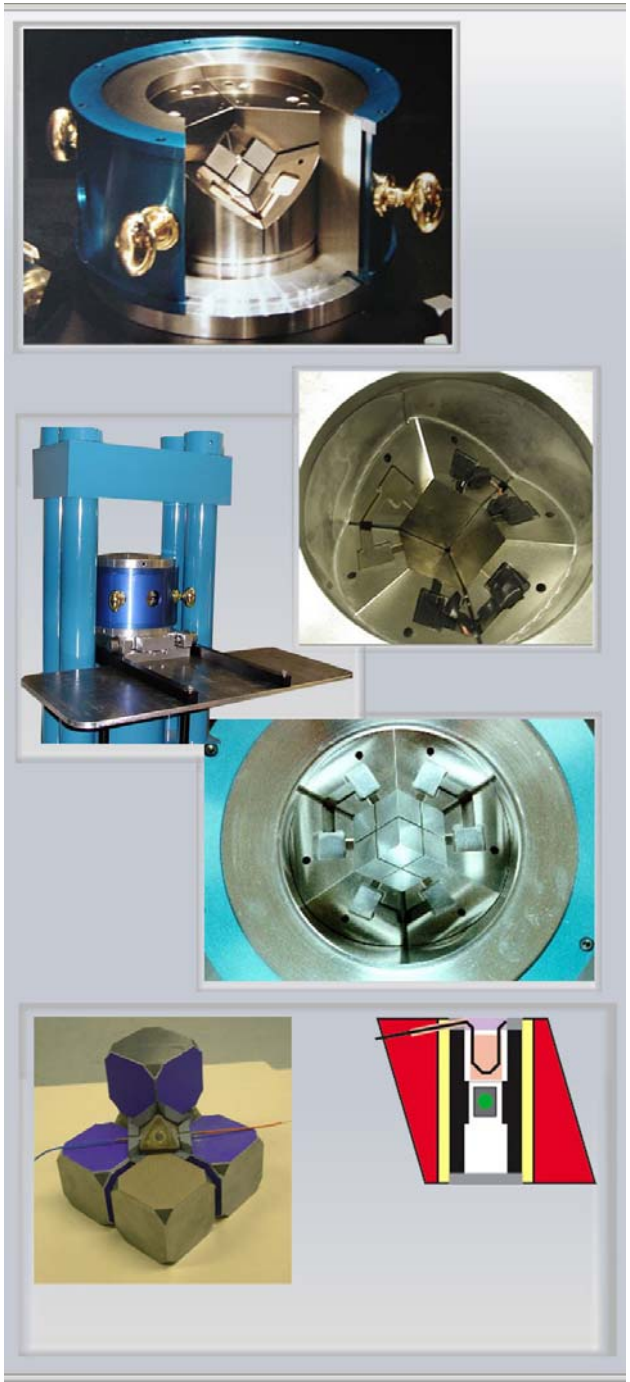

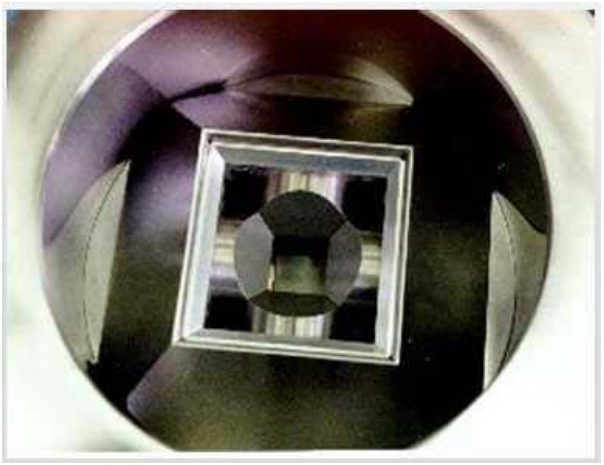

60 kbar, 2000°C (cubic)

250 kbar, 2000°C (Walker)

High pressure synthesis – belt/girdle

Drickamer cell

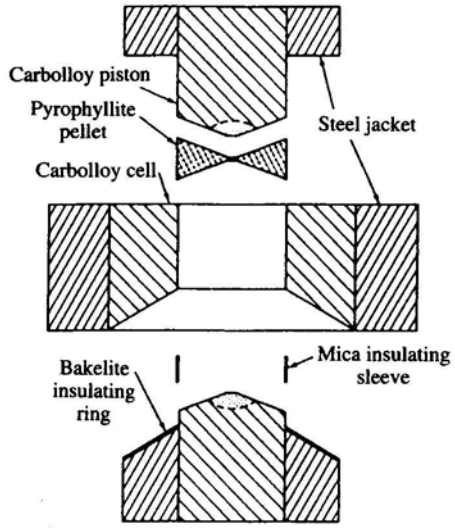

Need radial support

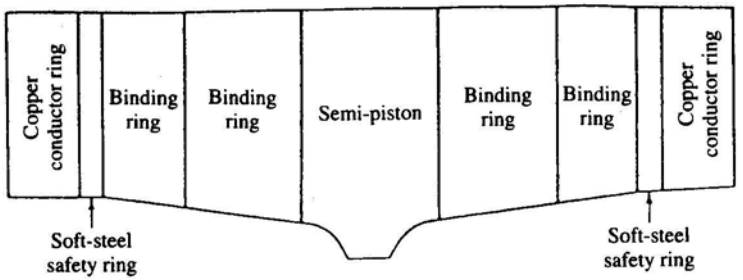

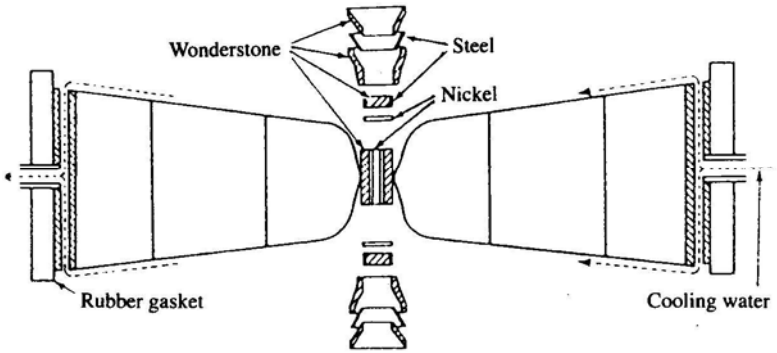

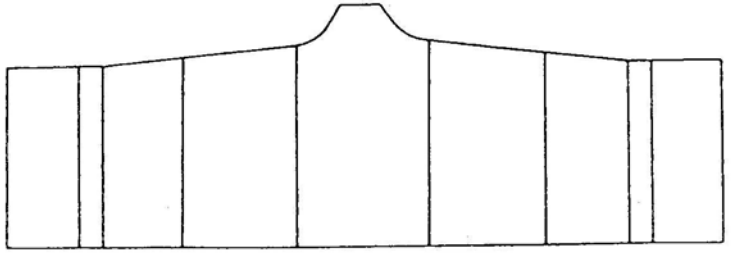

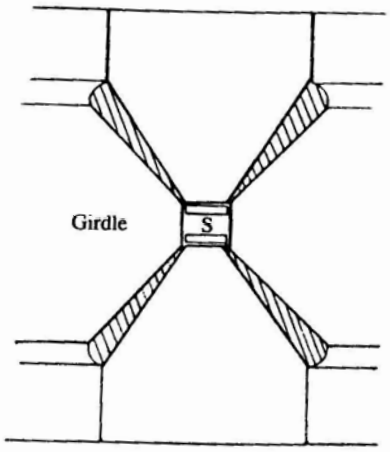

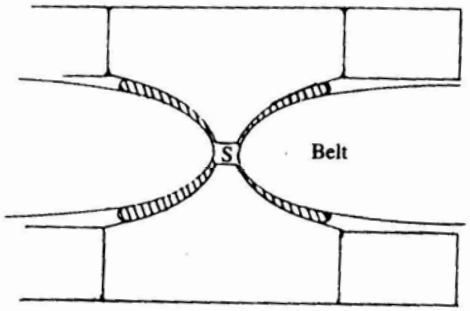

High pressure synthesis – toroid

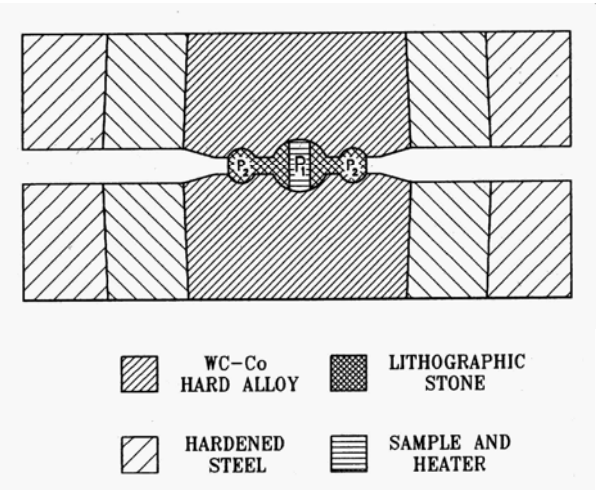

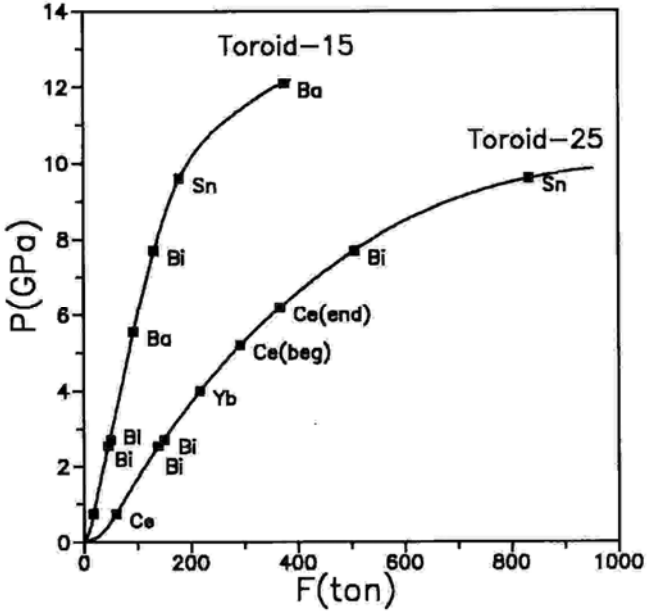

High Pressure Physics Institute (Moscow), cir. 1970

Calibration of HP furnace

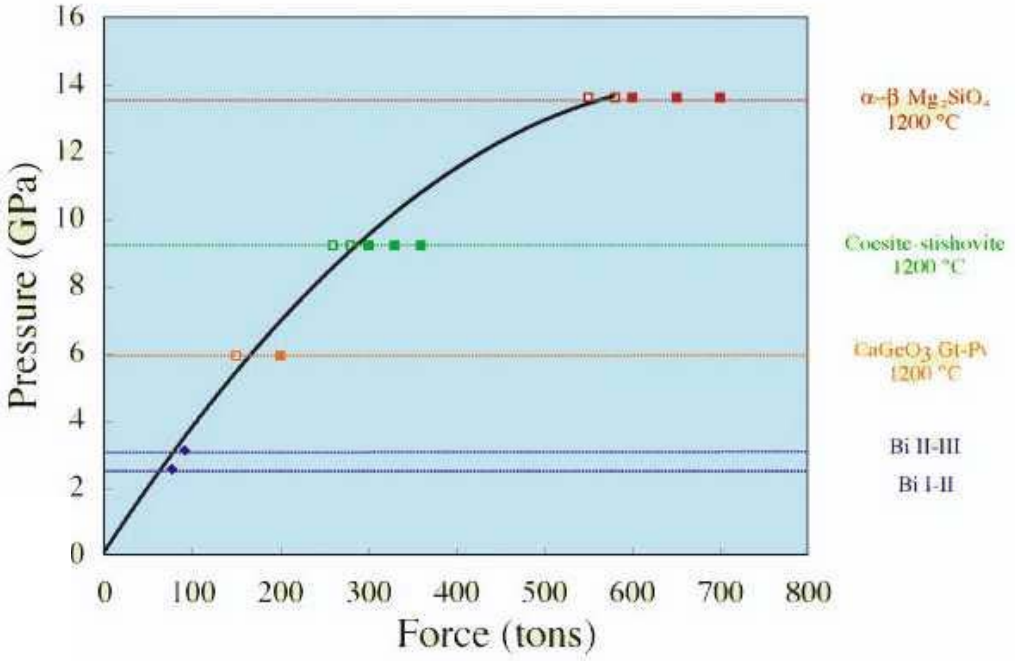

SiO_2

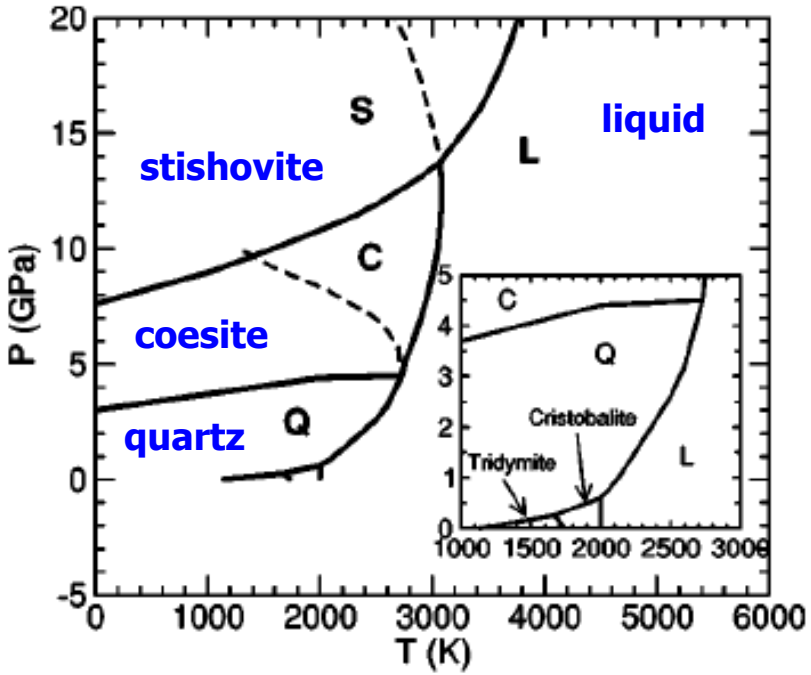

Ames Laboratory – Novel Materials and Ground States Group:

100 ton press

Cubic module

Walker module

MgB_2 single crystals

NdFeAs(O/F) single crystals

Ask Matt Tillman to give you a tour

Appendix: Bridgman method of crystal growth

The "Bridgman method" is based on the invention of Tammann in Göttingen early in the century. He used the "gradient-freeze method" as it is called now, in which crystals can be grown by directional solidification in the temperature gradient region of a furnace whose average temperature is decreased gradually. Bridgman has added mechanical movement of the crucible to this Tammann.method. Others, such as Stockbarger, have made important contributions to the Bridgman-method.

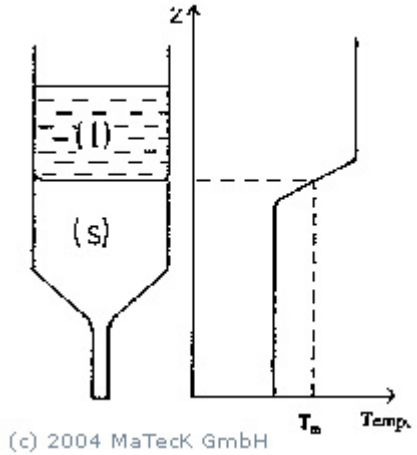

(c) 2004 MaTecK GmbH

High Pressure Furnace Setup

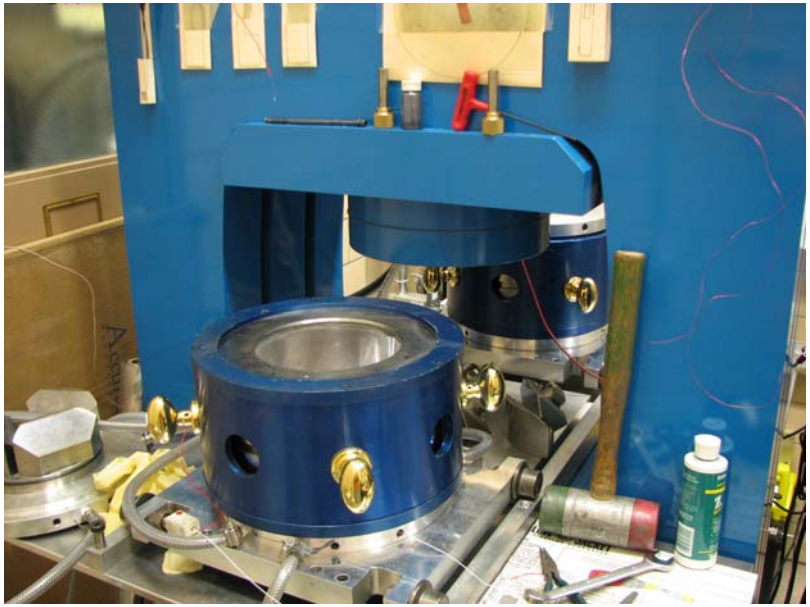

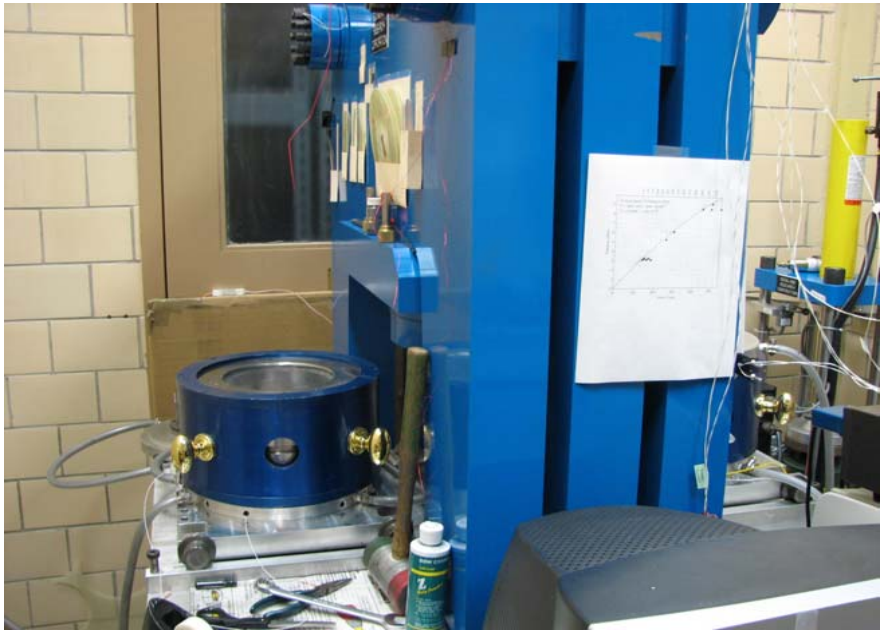

Rockland Research Corporation

Cubic Anvil

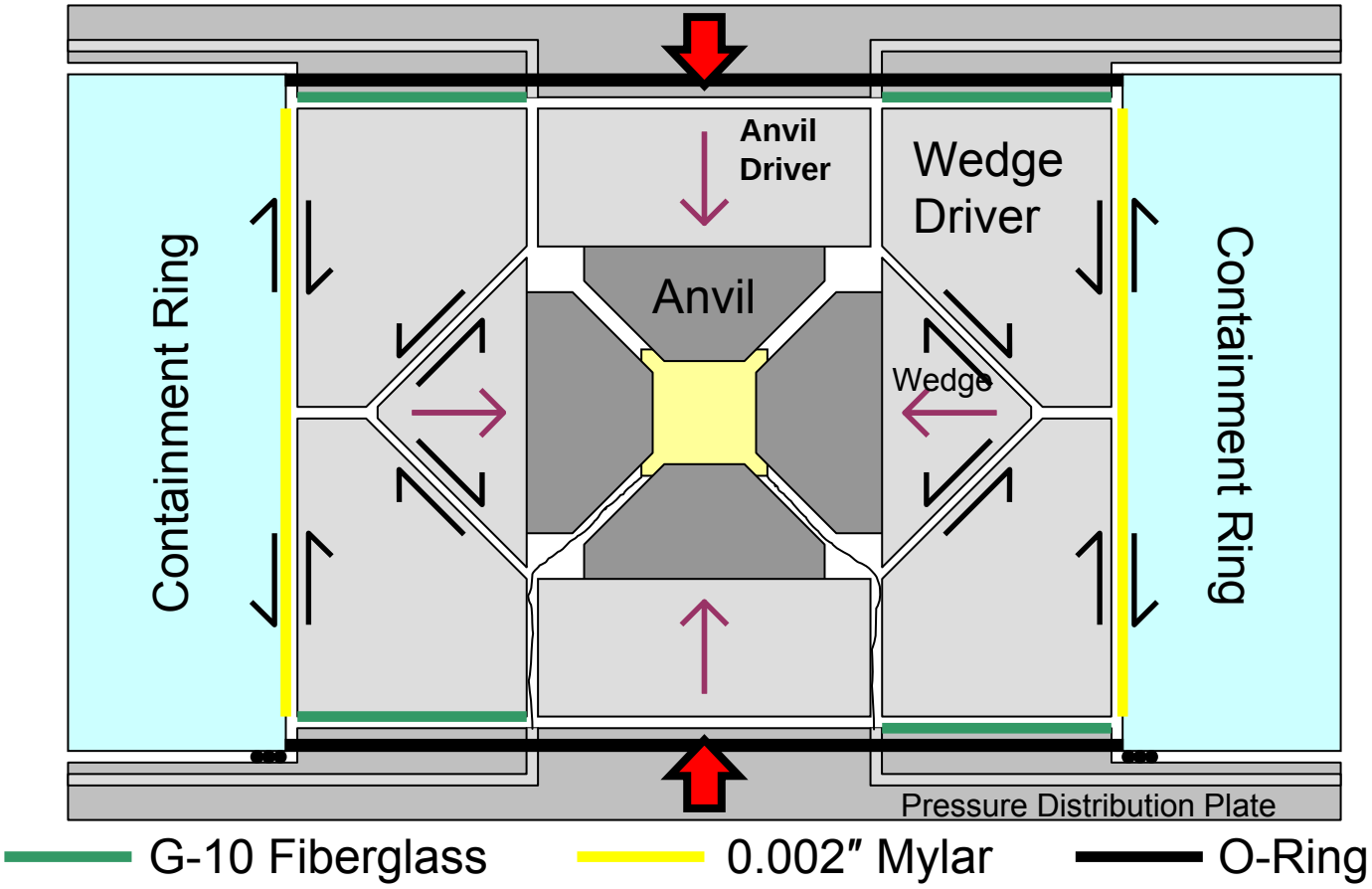

Appendix II - courtesy of Matt Tillman

The Sample Cell

- Pyrophyllite cube ~24mm on a side
- Carbon heater
- BN cup and cap
- Pyrophyllite plugs

- 3.3 GPa
- 0.164 cm^3
- 1900 °C

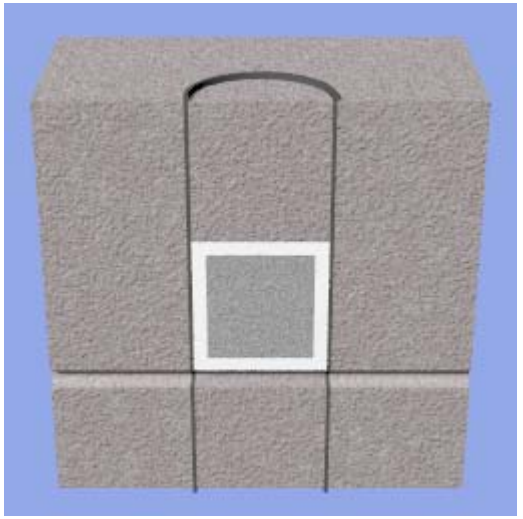

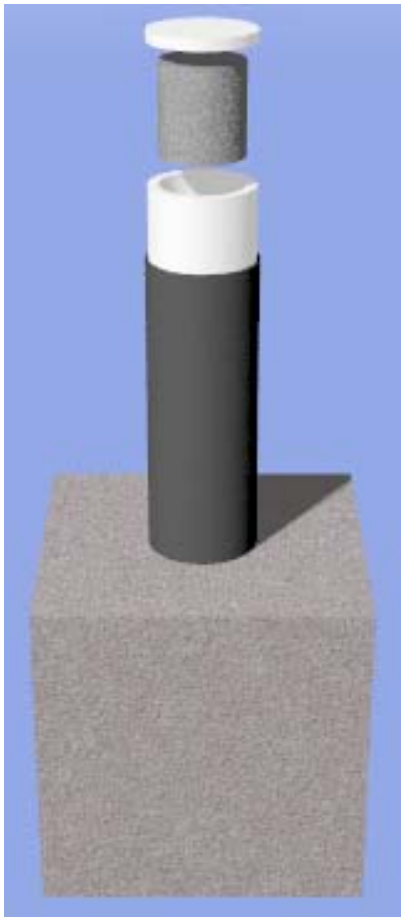

Calibration (Temperature)

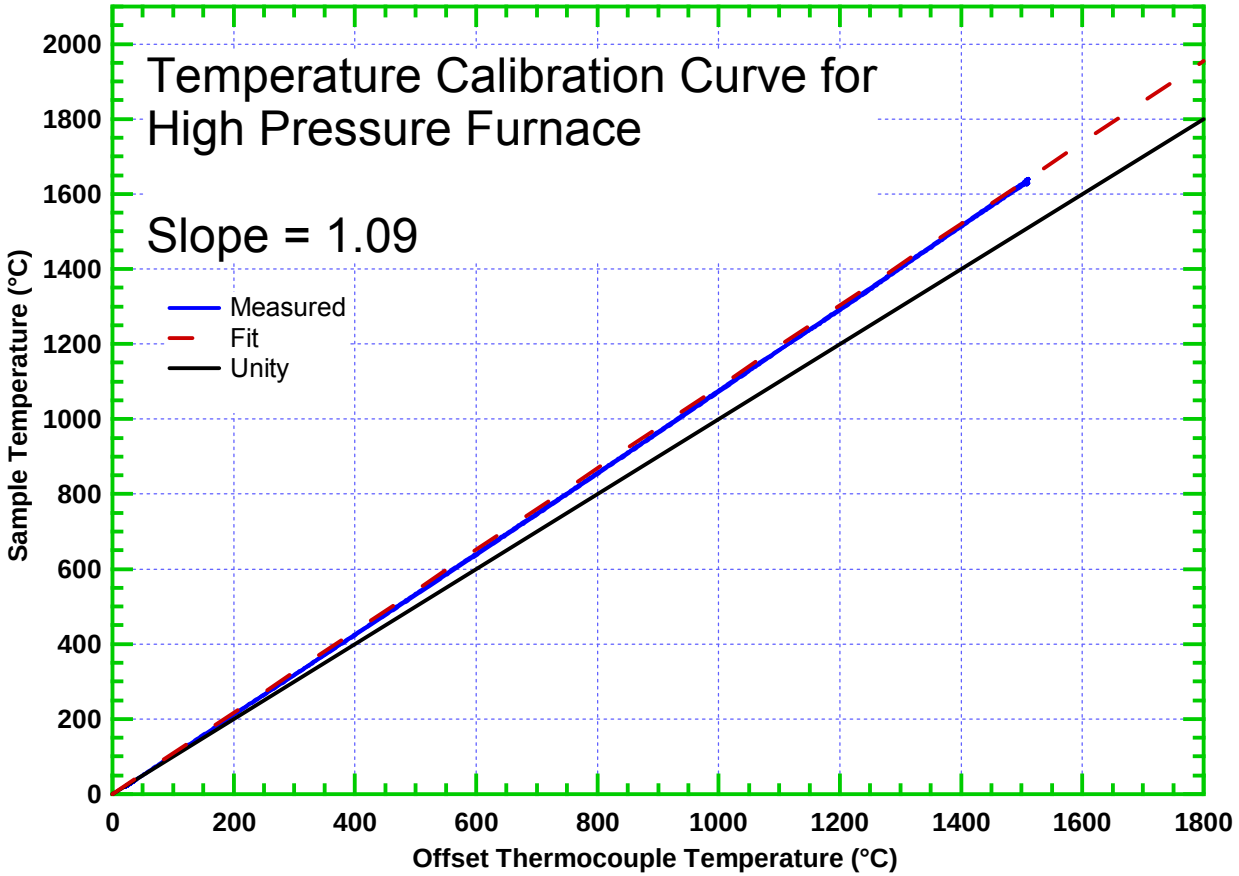

Appendix II - courtesy of Matt Tillman

Calibration (Pressure)

- Bi Transition

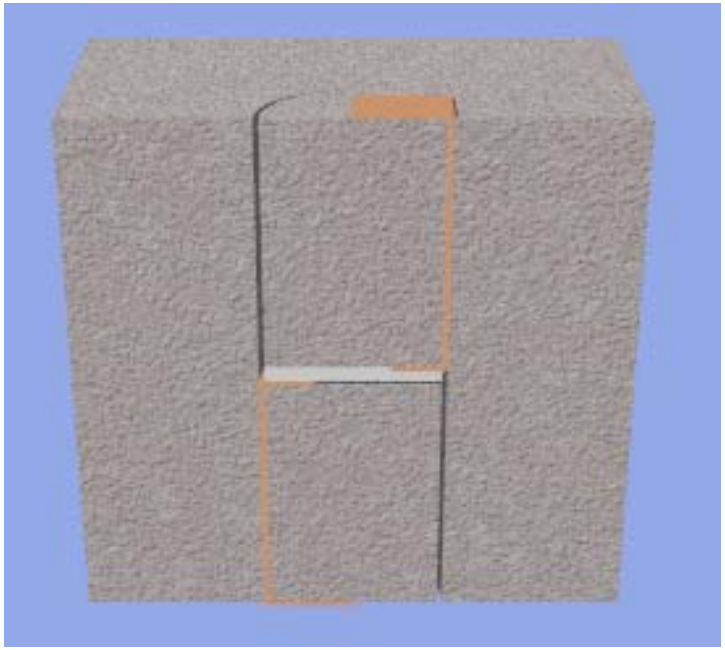

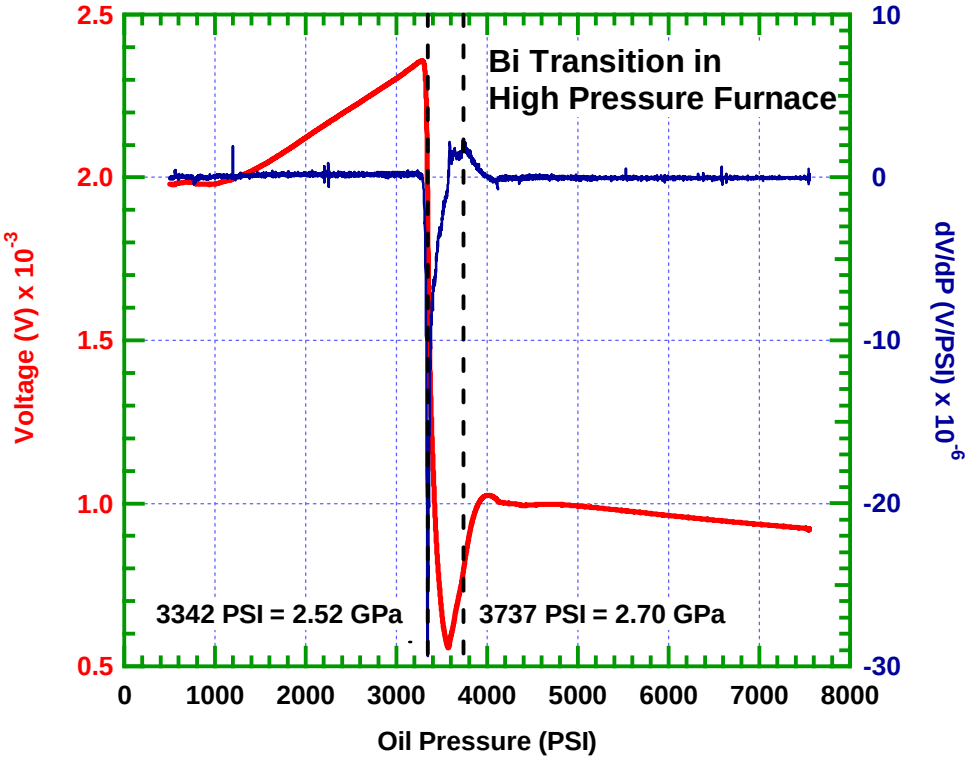

Appendix II - courtesy of Matt Tillman

Calibration (Pressure)

- Quartz/Coesite Transition

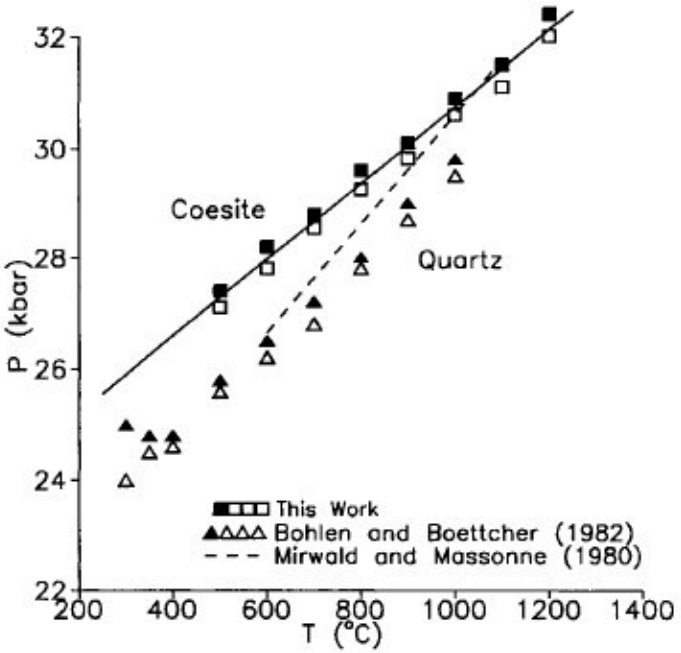

K. Bose and J. Ganguly, Am. Mineral. **80**, 231 (1995)

Oil Pressure (PSI)	Temperature (°C)	Pressure (GPa)	Result
7500	969	3.05	Coesite
7500	1212	3.22	Coesite
7500	1091	3.14	Coesite
7500	2063	3.81	Quartz
7500	1577	3.47	Quartz
7500	1455	3.39	Coesite
6500	969	3.05	Coesite
6500	1212	3.22	Coesite
6500	1455	3.39	Quartz
6500	1334	3.30	Quartz & Coesite

Appendix II - courtesy of Matt Tillman

Calibration (Pressure)

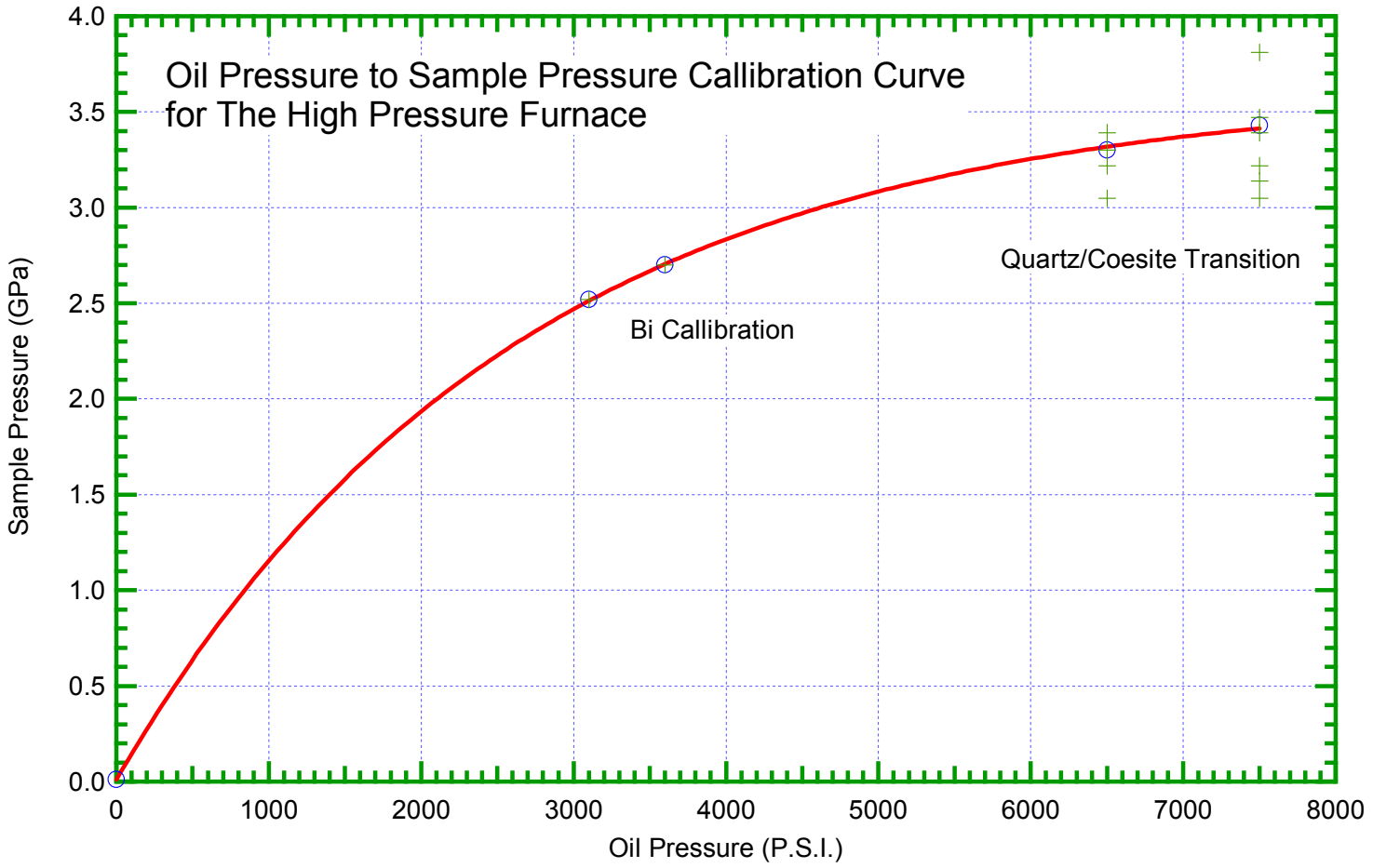

Appendix II - courtesy of Matt Tillman

Sample Packing (MgB_2)

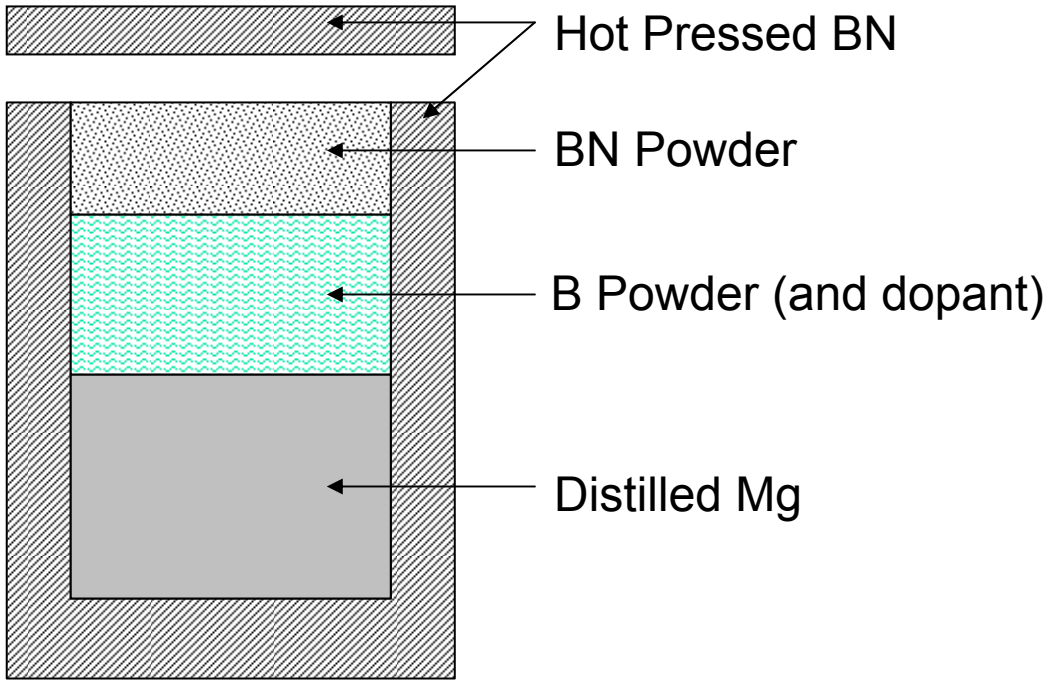

Appendix II - courtesy of Matt Tillman

Informal summary

Pressure work (at least beyond piston-cylinder) cannot be done as a hobby (still one can (i) buy/build a cell and have fun; (ii) use collaboration; (iii) use Users Facilities)

Requires good machine shop, and infrastructure for sample preparation

Research infrastructure for pressure measurements (optics/resistance/susceptibility/x-ray)

Possible non-hydrostaticity should be always on the table

Mere pressure derivatives can tell you a lot if bandstructure is of interest

Sometimes interesting things happen

Reading

PW Bridgman, The physics of high pressure

CA Swenson, Physics at high pressure *(you can talk to the author in our corridors)*

CC Bradley, High pressure methods solid state research

WB Holzapfel, NS Isaacs, High-pressure techniques in chemistry and physics

MI Eremets, High pressure experimental methods

many reviews, some useful